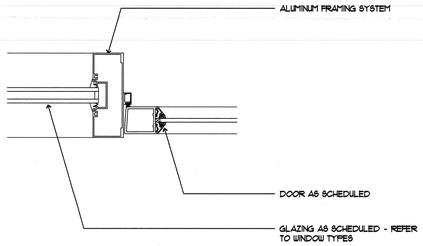

1 EXTERIOR ALUMINUM DOOR JAMB DETAIL

3"= 1'-0" DTLDR01.DWG 07/21/98 15:18

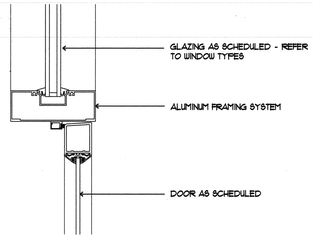

2 EXTERIOR ALUMINUM DOOR HEADER

3"= 1'-0" DTLDR01.DWG 07/21/98 15:18

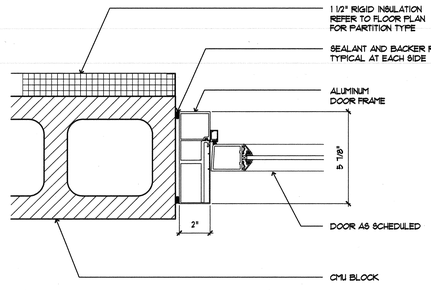

3 EXTERIOR ALUMINUM DOOR JAMB @ CMU WALL

3"= 1'-0" DTLDR01.DWG 07/21/98 15:18

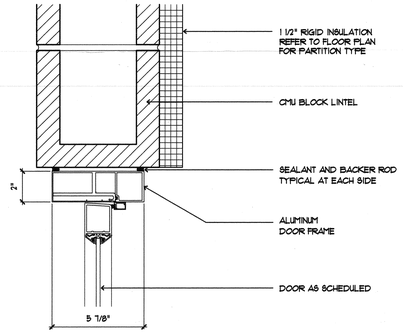

4 EXTERIOR ALUMINUM DOOR HEADER @ CMU WALL

3"= 1'-0" DTLDR01.DWG 07/21/98 15:18

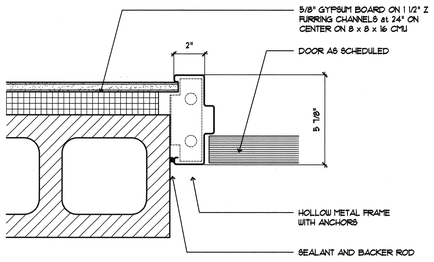

5 EXTERIOR DOOR JAMB @ CMU WALL

3"= 1'-0" DTLDR01.DWG 07/21/98 15:18

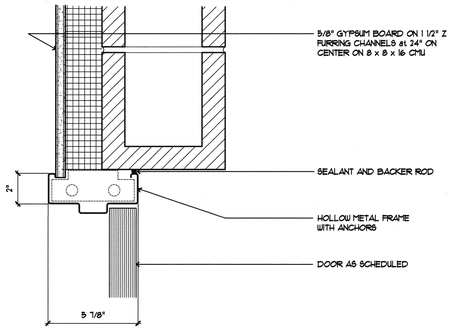

6 EXTERIOR DOOR HEADER @ CMU WALL

3"= 1'-0" DTLDR01.DWG 07/21/98 15:18

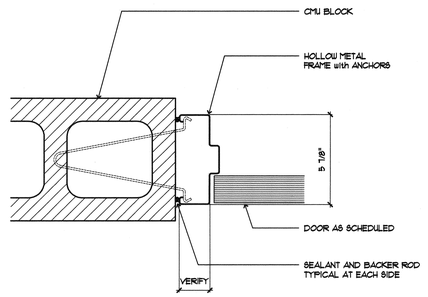

7 EXTERIOR DOOR JAMB @ CMU WALL

3"= 1'-0" DTLDR01.DWG 07/21/98 15:18

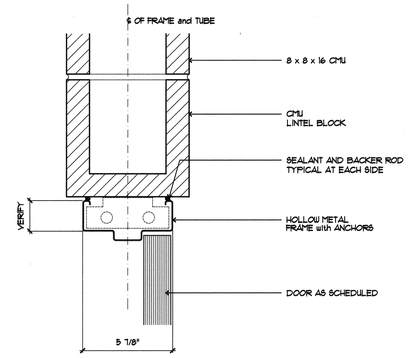

8 EXTERIOR DOOR HEADER @ CMU WALL

3"= 1'-0" DTLDR01.DWG 07/21/98 15:18

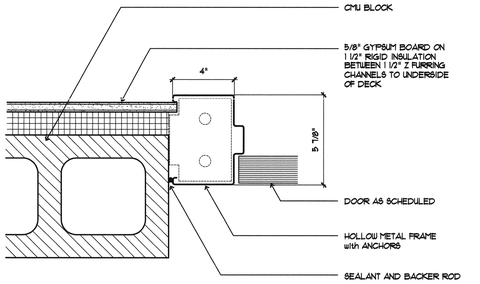

9 EXTERIOR DOOR JAMB @ CMU WALL

3"= 1'-0" DTLDR01.DWG 07/21/98 15:18

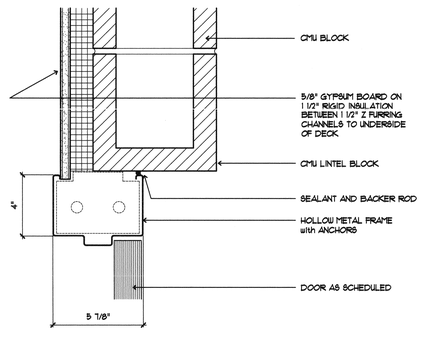

10 EXTERIOR DOOR HEADER @ CMU WALL

3"= 1'-0" DTLDR01.DWG 07/21/98 15:18

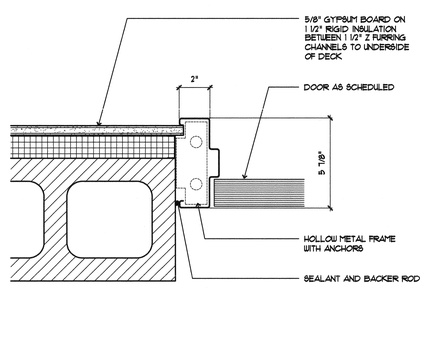

11 EXTERIOR DOOR JAMB @ CMU WALL

3"= 1'-0" DTLDR01.DWG 07/21/98 15:18

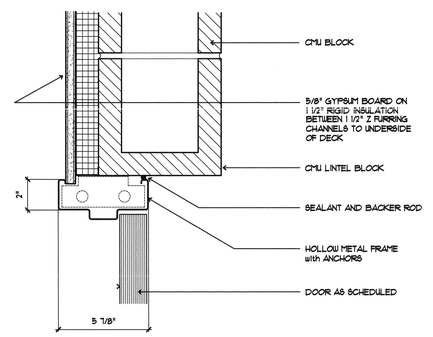

12 EXTERIOR DOOR HEADER @ CMU WALL

3"= 1'-0" DTLDR01.DWG 07/21/98 15:18

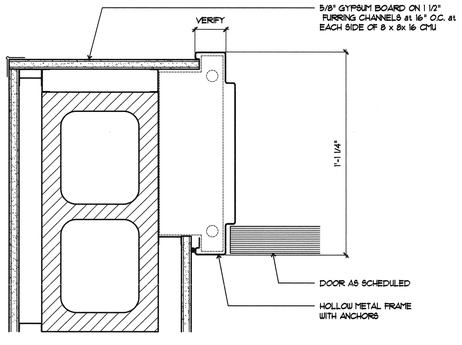

13 INTERIOR HOLLOW METAL DOOR JAMB @ CMU WALL

3"= 1'-0" DTLDR01.DWG 07/21/98 15:18

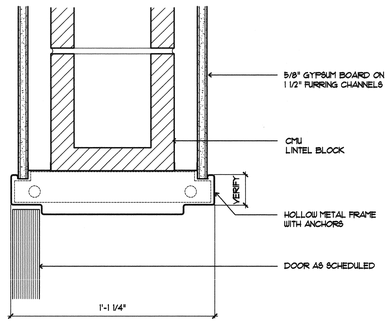

14 INTERIOR HOLLOW METAL DOOR HEADER @ CMU WALL

3"= 1'-0" DTLDR01.DWG 07/21/98 15:18

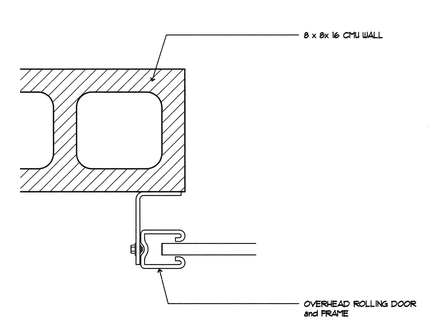

15 ROLL-UP DOOR JAMB @ CMU WALL

3"= 1'-0" DTLDR01.DWG 07/21/98 15:18

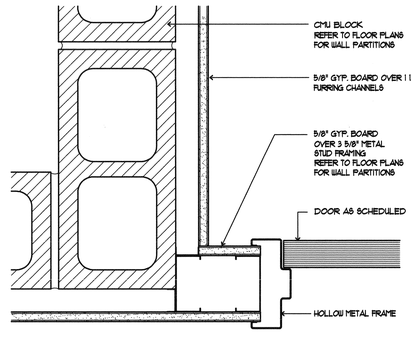

16 INTERIOR DOOR JAMB @ CMU WALL

3"= 1'-0" DTLDR01.DWG 07/22/98 13:07

JMA ARCHITECTURE STUDIOS
4292 SOUTH MARYLAND PARKWAY 2033

The Stan Fulton Building for the International Gaming Institute

Las Vegas, Nevada

the contractor shall check and verify all dimensions and report all errors and omissions to this office prior to commencing work. Notes drawings are not to be scaled

copyright 1996 JMA Architecture Studios

number date description

RECORD DRAWING

This record drawing, dated July 16, 2001, has been prepared, in part, based upon information furnished by others. While this information is believed to be reliable, JMA Architecture Studios, cannot assure its accuracy, and thus is not responsible for the accuracy of this record drawing or for any errors or omissions which may have been incorporated into it as a result. Those relying on this record document are advised to obtain independent verification of its accuracy before applying it for any purpose.

97105
project number

November 4, 1998
date

D. Bringas
drawn

Steve Wise
checked

Door Details

A8.10

J:\1997\97105\CADD\CD\105a810.dwg Thu Jul 12 10:31:55 2001 JMA Architecture Studios

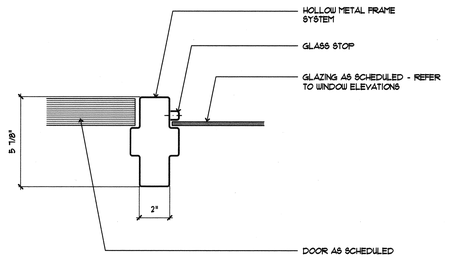

1 INTERIOR HOLLOW METAL DOOR JAMB DETAIL @ WINDOW

3"= 1'-0" DTLDR02.DWG 07/21/98 15:18

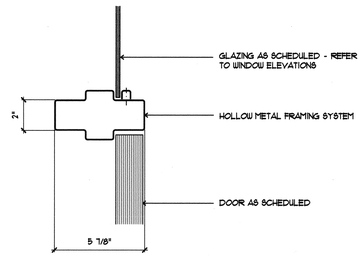

2 INTERIOR HOLLOW METAL DOOR HEADER DETAIL @ WINDOW

3"= 1'-0" DTLDR02.DWG 07/21/98 15:18

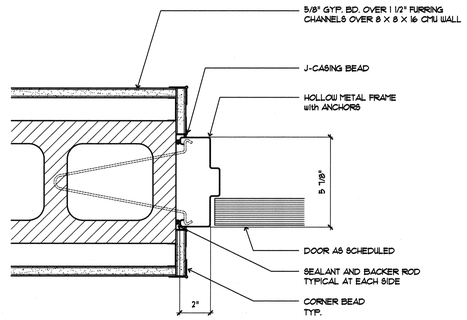

3 INTERIOR HOLLOW METAL DOOR JAMB @ CMU WALL

3"= 1'-0" DTLDR02.DWG 07/21/98 15:18

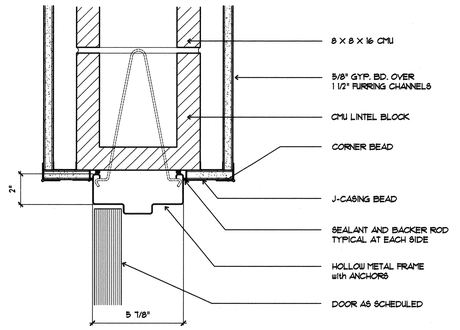

4 INTERIOR HOLLOW METAL DOOR HEADER @ CMU WALL

3"= 1'-0" DTLDR02.DWG 07/21/98 15:18

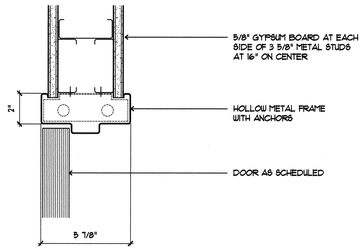

5 INTERIOR HOLLOW METAL DOOR HEADER @ WALL PARTITION DETAIL

3"= 1'-0" DTLDR02.DWG 07/21/98 15:18

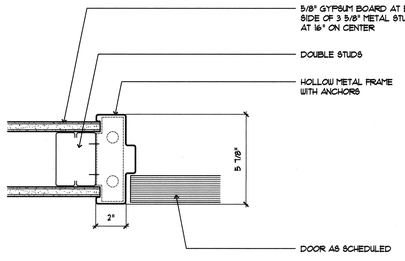

6 INTERIOR HOLLOW METAL DOOR JAMB @ WALL PARTITION

3"= 1'-0" DTLDR02.DWG 07/21/98 15:18

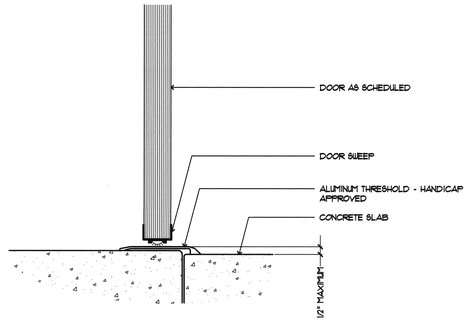

7 EXTERIOR THRESHOLD DETAIL

3"= 1'-0" DTLDR02.DWG 07/21/98 15:18

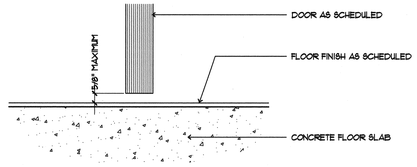

8 INTERIOR THRESHOLD DETAIL

3"= 1'-0" DTLDR02.DWG 07/21/98 15:18

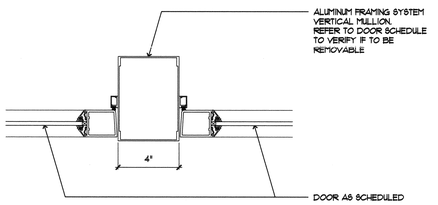

9 EXTERIOR INTERMEDIATE ALUMINUM DOOR JAMB

3"= 1'-0" DTLDR02.DWG 07/22/98 13:09

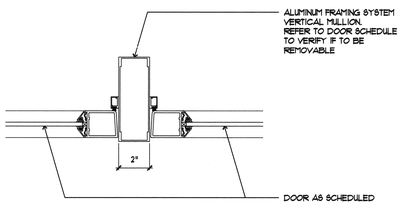

10 EXTERIOR ALUMINUM DOOR JAMB

3"= 1'-0" DTLDR02.DWG 07/21/98 15:18

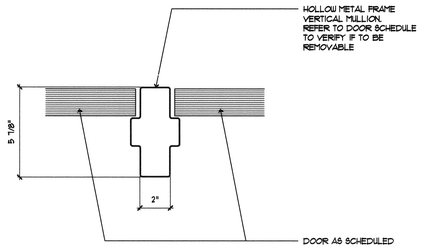

11 INTERIOR HOLLOW METAL DOOR JAMB

3"= 1'-0" DTLDR02.DWG 07/21/98 15:18

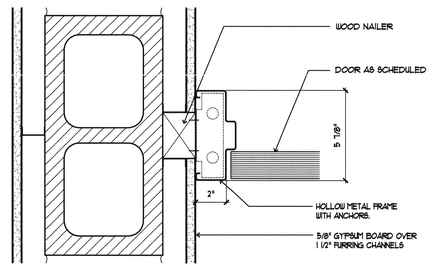

12 INTERIOR HOLLOW METAL DOOR JAMB

3"= 1'-0" DTLDR02.DWG 07/21/98 15:18

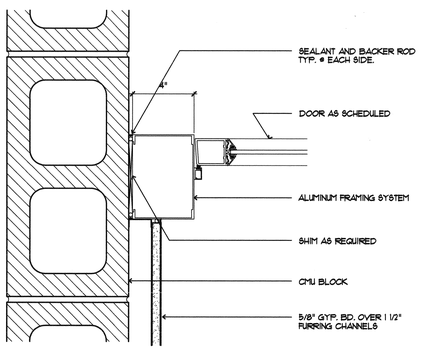

13 EXTERIOR ALUMINUM METAL DOOR JAMB

3"= 1'-0" DTLDR02.DWG 07/21/98 15:18

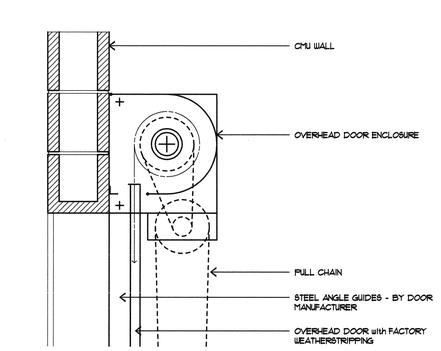

14 O.H. DOOR HEADER

1 1/2"= 1'-0" DTLDR02.DWG 07/21/98 15:18

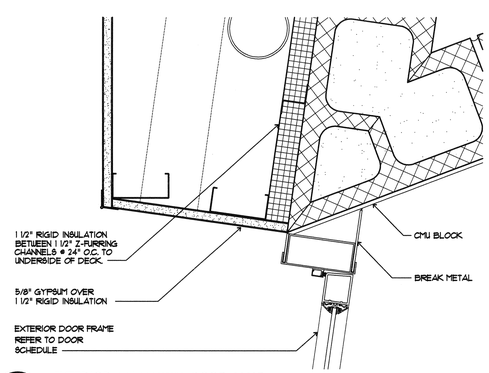

15 EXTERIOR ALUMINUM DOOR JAMB

3"= 1'-0" DTLDR02.DWG 10/15/98 08:29

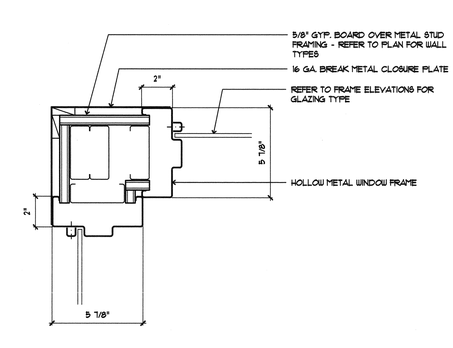

16 INTERIOR HOLLOW METAL FRAME CORNER MULLION

3"= 1'-0" DTLDR02.DWG 10/15/98 08:29

JMA ARCHITECTURE STUDIOS
4292 SOUTH MARYLAND PARKWAY LAS VEGAS, NEVADA 89119

The Stan Fulton Building for the International Gaming Institute

Las Vegas, Nevada

the contractor shall check and verify all dimensions and report all errors and omissions to this office prior to commencing work - these drawings are not to be scaled

copyright 1996 JMA Architecture Studios

number	date	description

RECORD DRAWING

This record drawing, dated July 16, 2001, has been prepared, in part, based upon information furnished by others. While this information is believed to be reliable, JMA Architecture Studios, cannot assure its accuracy, and thus is not responsible for the accuracy of this record drawing or for any errors or omissions which may have been incorporated into it as a result. Those relying on this record document are advised to obtain independent verification of its accuracy before applying it for any purpose.

97105
project number

November 4, 1998
date

D. Bringas
drawn

Steve Wise
checked

Door Details

A8.11

J:\1997\97105\CADD\DIL05d811.dwg Thu Jul 12 10:32:11 2001 JMA Architecture Studios

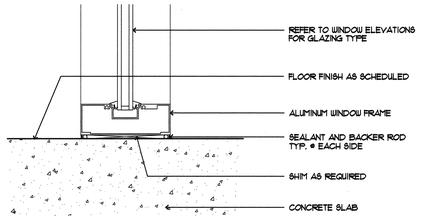

1 EXTERIOR ALUMINUM WINDOW SILL DETAIL

3"= 1'-0" DTLWDW01.DWG 07/21/98 14:54

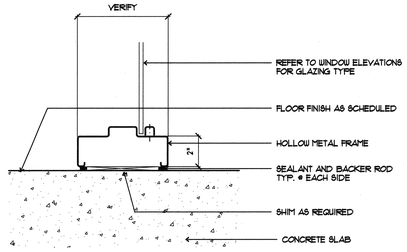

2 INTERIOR HOLLOW METAL WINDOW SILL DETAIL

3"= 1'-0" DTLWDW01.DWG 07/21/98 14:54

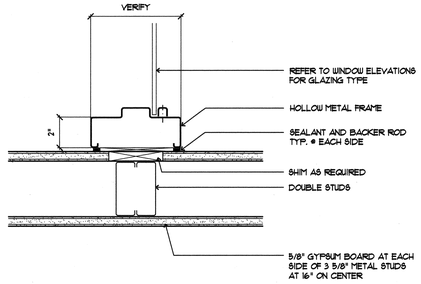

3 INTERIOR HOLLOW METAL WINDOW JAMB @ WALL PARTITION

3"= 1'-0" DTLWDW01.DWG 07/21/98 14:54

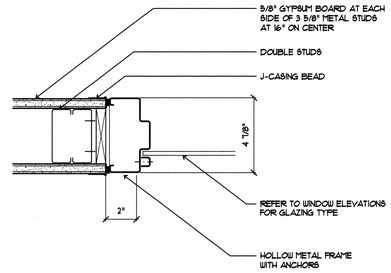

4 INTERIOR HOLLOW METAL WINDOW JAMB @ GYP. WALL DETAIL

3"= 1'-0" DTLWNW01.DWG 07/21/98 15:18

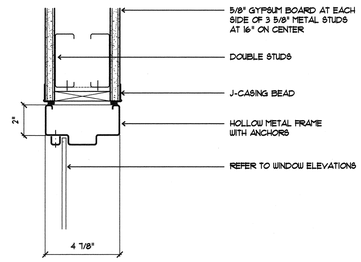

5 INTERIOR HOLLOW METAL WINDOW HEADER @ GYP. WALL DETAIL

3"= 1'-0" DTLWDW01.DWG 07/21/98 15:18

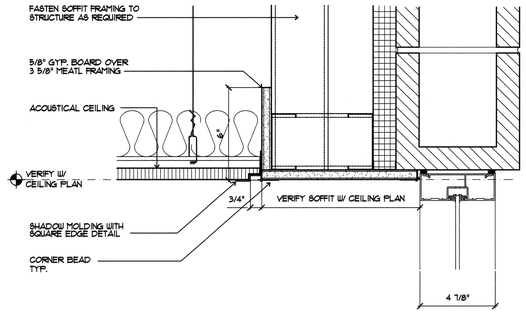

6 EXTERIOR ALUMINUM WINDOW HEADER @ GYP. WALL DETAIL

3"= 1'-0" DTLWDW01.DWG 07/21/98 15:18

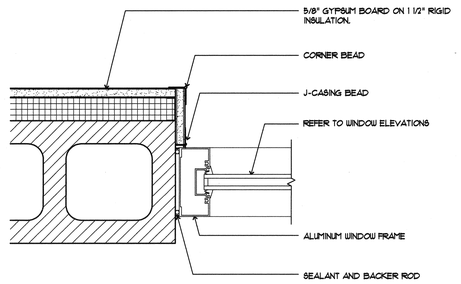

7 EXTERIOR WINDOW JAMB @ CMU WALL

3"= 1'-0" DTLWDW01.DWG 07/21/98 14:54

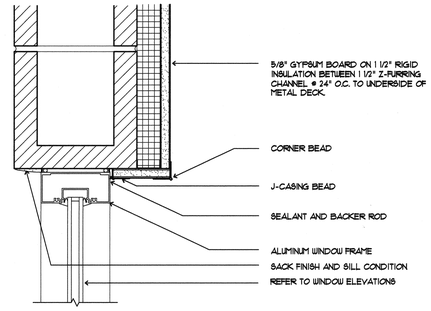

8 EXTERIOR WINDOW HEADER @ CMU WALL

3"= 1'-0" DTLWNW01.DWG 07/22/98 13:16

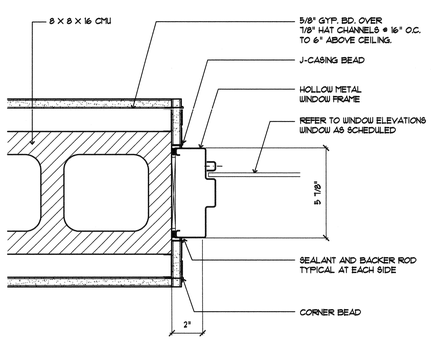

9 INTERIOR HOLLOW METAL WINDOW JAMB @ CMU WALL

3"= 1'-0" DTLWDW01.DWG 07/21/98 15:18

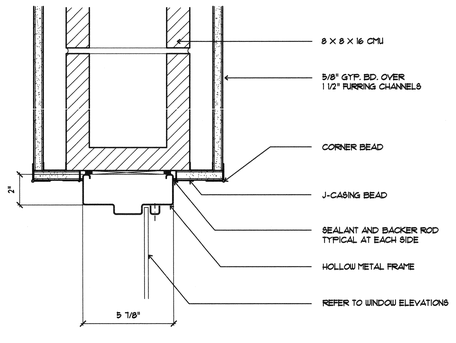

10 INTERIOR HOLLOW METAL WINDOW HEADER @ CMU WALL

3"= 1'-0" DTLWDW01.DWG 07/21/98 15:18

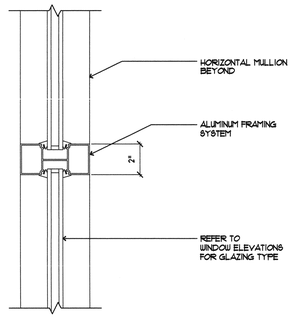

11 EXTERIOR INTERMEDIATE ALUMINUM WINDOW MULLION

3"= 1'-0" DTLWDW01.DWG 07/21/98 15:18

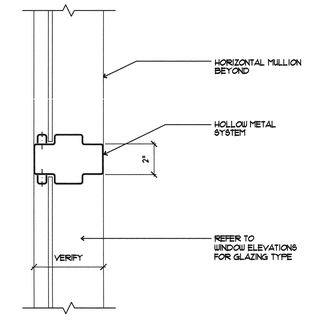

12 INTERIOR INTERMEDIATE HOLLOW METAL WINDOW MULLION

3"= 1'-0" DTLWDW01.DWG 07/21/98 15:18

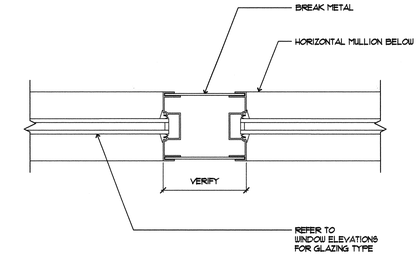

13 EXTERIOR WINDOW JAMB @ BREAK METAL CONDITION

3"= 1'-0" DTLWDW01.DWG 07/21/98 15:18

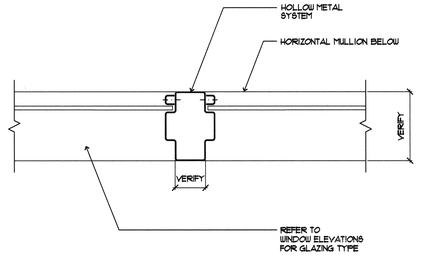

14 INTERIOR INTERMEDIATE HOLLOW METAL MULLION

3"= 1'-0" DTLWDW01.DWG 07/21/98 15:18

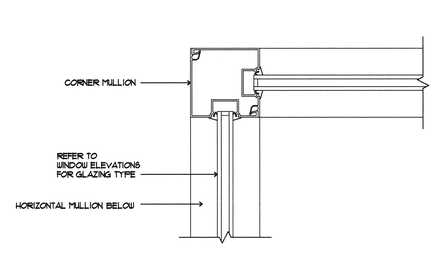

15 EXTERIOR WINDOW JAMB @ CORNER CONDITION

3"= 1'-0" DTLWDW01.DWG 07/21/98 15:18

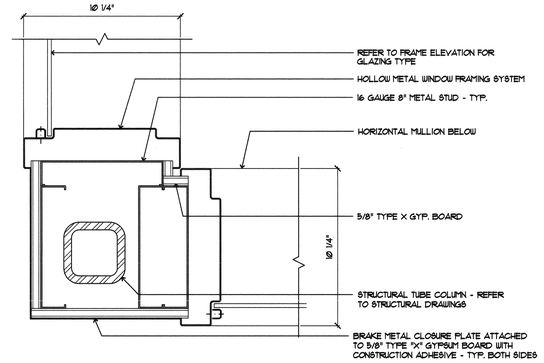

16 INTERIOR WINDOW JAMB @ CORNER CONDITION

3"= 1'-0" DTLWNW01.DWG 02/14/99 23:03

JMA ARCHITECTURE STUDIOS
4292 SOUTH MARYLAND PARKWAY LAS VEGAS, NEVADA 89119

The Stan Fulton Building for the International Gaming Institute

Las Vegas, Nevada

the contractor shall check and verify all dimensions and report all errors and omissions to this office prior to commencing work. these drawings are not to be scaled

copyright 1996 JMA Architecture Studios

number | date | description

RECORD DRAWING

This record drawing, dated July 16, 2001, has been prepared, in part, based upon information furnished by others. While this information is believed to be reliable, JMA Architecture Studios, cannot assure its accuracy, and thus is not responsible for the accuracy of this record drawing or for any errors or omissions which may have been incorporated into it as a result. Those relying on this record document are advised to obtain independent verification of its accuracy before applying it for any purpose.

97105 project number

November 4, 1998 date

D. Bringas drawn

Steve Wise checked

Window Details

A8.12

J:\1997\97105\CADD\CD\105a812.dwg Thu Jul 12 10:32:27 2001 JMA Architecture Studios

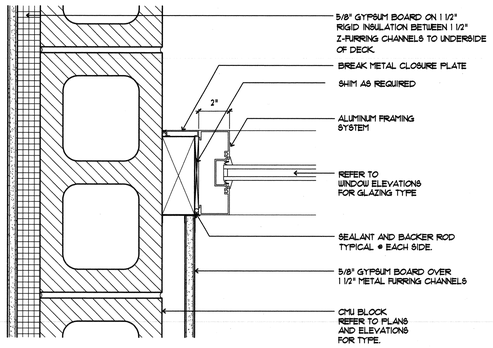

1 EXTERIOR ALUMINUM WINDOW JAMB @ CMU DETAIL

3"= 1'-0" DTLWNW02.DWG 07/21/98 14:54

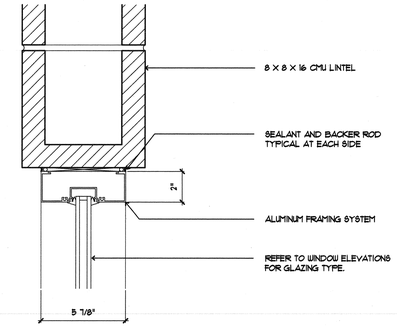

2 EXTERIOR ALUMINUM WINDOW HEADER @ CMU WALL

3"= 1'-0" DTLWNW02.DWG 07/22/98 13:19

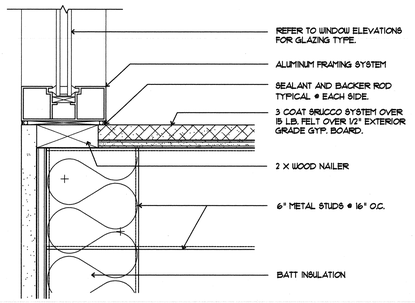

3 EXTERIOR WINDOW SILL DETAIL

3"= 1'-0" DTLWNW02.DWG 07/22/98 20:53

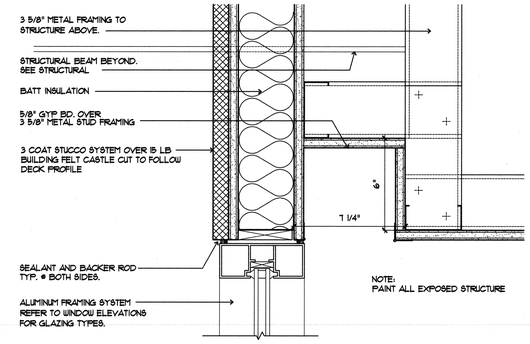

4 EXTERIOR WINDOW HEADER DETAIL

3"= 1'-0" DTLWNW02.DWG 07/22/98 20:53

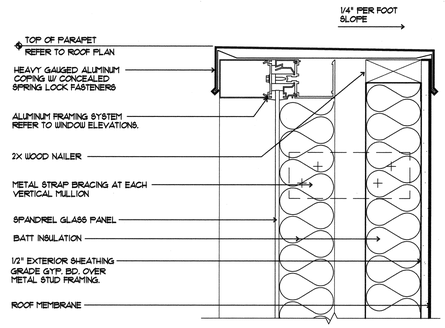

5 EXTERIOR WINDOW PARAPET @ ROOF

3"= 1'-0" DTLWNW02.DWG 07/22/98 13:19

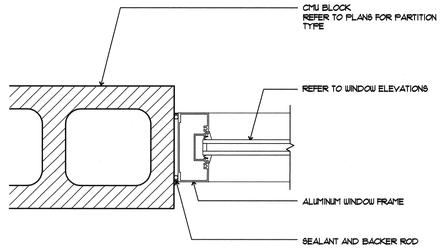

6 EXTERIOR ALUMINUM WINDOW JAMB @ CMU WALL

3"= 1'-0" DTLWNW02.DWG 07/22/98 13:19

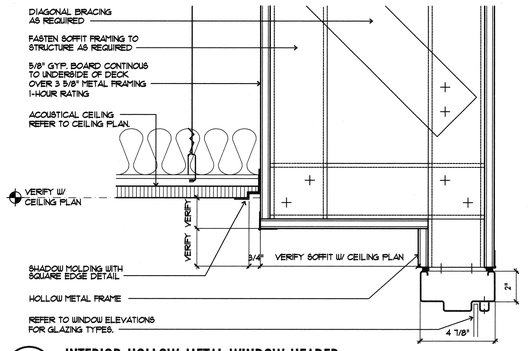

7 INTERIOR HOLLOW METAL WINDOW HEADER

3"= 1'-0" DTLWNW02.DWG 07/22/98 20:53

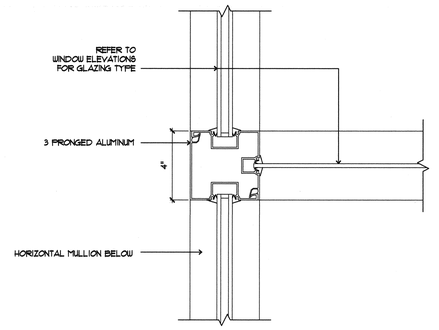

8 EXTERIOR WINDOW JAMB DETAIL

3"= 1'-0" DTLWNW02.DWG 07/22/98 20:53

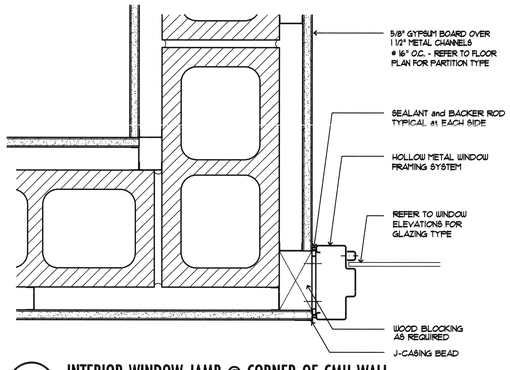

9 INTERIOR WINDOW JAMB @ CORNER OF CMU WALL

3"= 1'-0" DTLWNW02.DWG 07/22/98 13:19

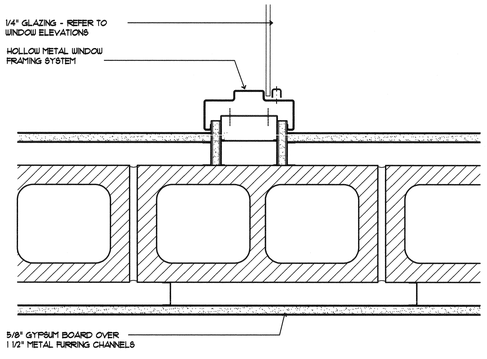

10 INTERIOR WINDOW JAMB @ 1 HR. RATED CMU WALL

3"= 1'-0" DTLWNW02.DWG 07/22/98 13:19

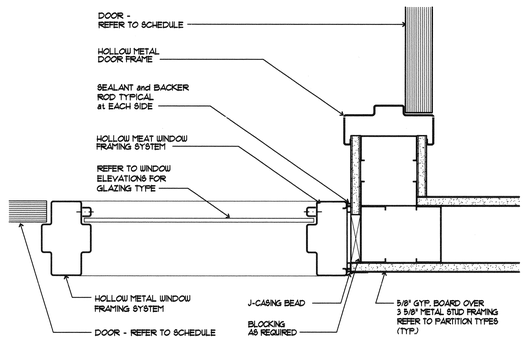

11 INTERIOR SIDELITE WINDOW JAMB @ WALL

3"= 1'-0" DTLWNW02.DWG 07/22/98 13:19

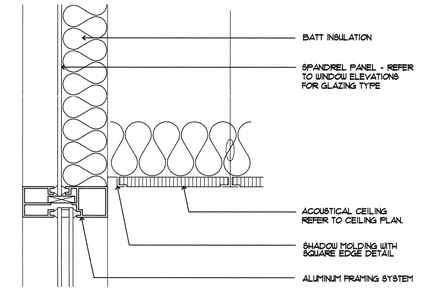

12 EXTERIOR WINDOW HEADER DETAIL @ SPANDREL AND CEILING

3"= 1'-0" DTLWNW02.DWG 07/22/98 13:19

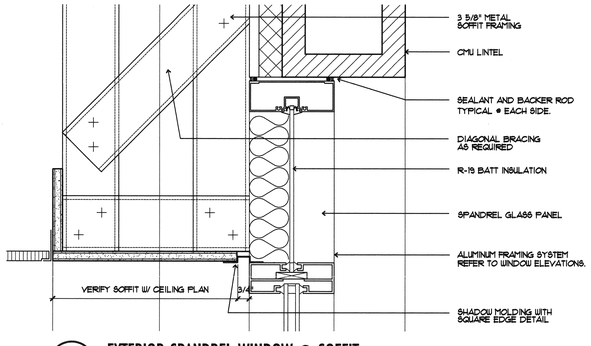

13 EXTERIOR SPANDREL WINDOW @ SOFFIT

3"= 1'-0" DTLWNW02.DWG 07/22/98 13:19

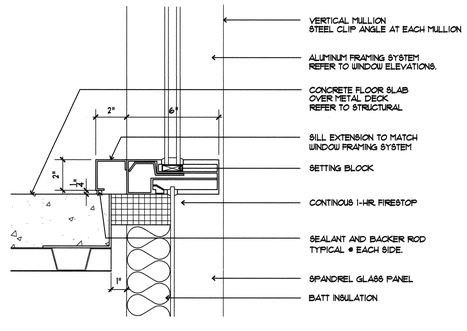

14 WINDOW SILL @ CURTAIN WALL

3"= 1'-0" DTLWNW02.DWG 07/22/98 13:19

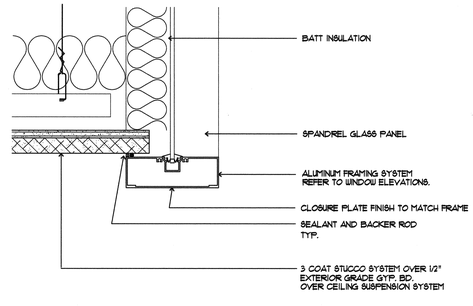

15 EXTERIOR SPANDREL WINDOW

3"= 1'-0" DTLWNW02.DWG 07/22/98 13:19

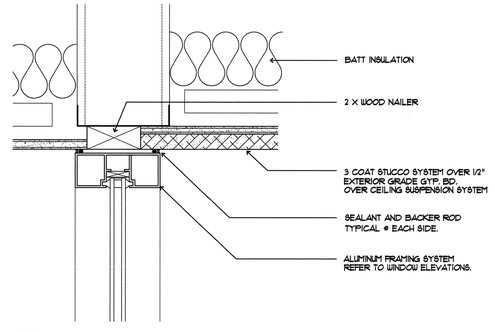

16 EXTERIOR WINDOW AT CEILING

3"= 1'-0" DTLWNW02.DWG 07/22/98 13:19

JMA ARCHITECTURE STUDIOS
4292 SOUTH MARYLAND PARKWAY LAS VEGAS, NEVADA 89119 (702) 733-7733

The Stan Fulton Building for the International Gaming Institute

Las Vegas, Nevada

the contractor shall check and verify all dimensions and report all errors and omissions to this office prior to commencing work - these drawings are not to be scaled

copyright 1996 JMA Architecture Studios

number	date	description

RECORD DRAWING

This record drawing, dated July 16, 2001, has been prepared, in part, based upon information furnished by others. While this information is believed to be reliable, JMA Architecture Studios, cannot assure its accuracy, and thus is not responsible for the accuracy of this record drawing or for any errors or omissions which may have been incorporated into it as a result. Those relying on this record document are advised to obtain independent verification of its accuracy before applying it for any purpose.

97105
project number

November 4, 1998
date

D. Bringas
drawn

Steve Wise
checked

Window Details

A8.13

J:\1997\97105\CADD\CD\105d13.dwg Thu Jul 12 10:32:44 2001 JMA Architecture Studios

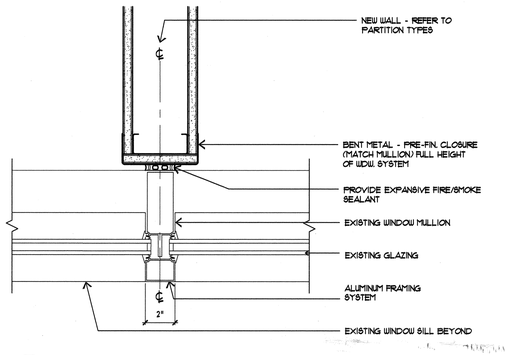

1 EXTERIOR ALUMINUM WINDOW JAMB @ WALL

3"= 1'-0" DTLWNW03.DWG 10/15/98 08:29

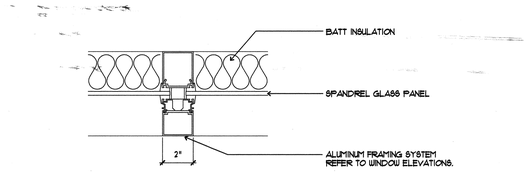

2 EXTERIOR ALUMINUM WINDOW MULLION

3"= 1'-0" DTLWNW03.DWG 10/15/98 08:29

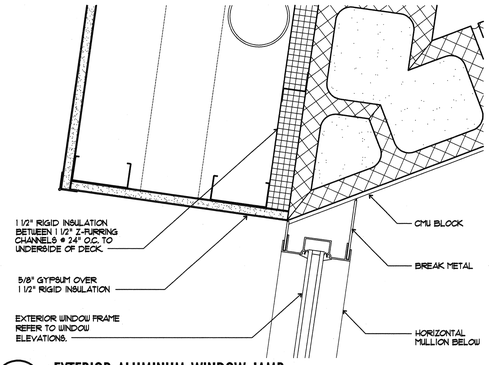

3 EXTERIOR ALUMINUM WINDOW JAMB

3"= 1'-0" DTLWNW03.DWG 10/15/98 08:29

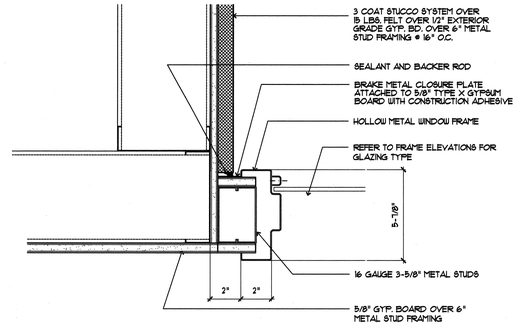

4 INTERIOR HOLLOW METAL WINDOW JAMB @ WALL

3"= 1'-0" DTLWNW03.DWG 10/15/98 08:29

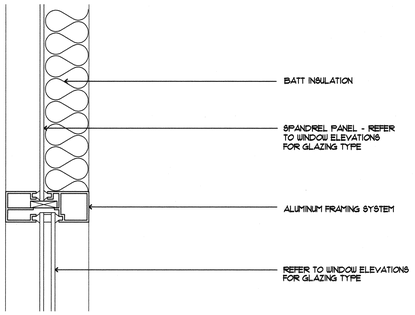

5 EXTERIOR WINDOW HEADER DETAIL

3"= 1'-0" DTLWNW03.DWG 10/28/98 11:13

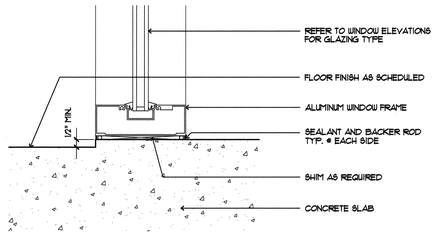

6 EXTERIOR ALUMINUM WINDOW SILL DETAIL

3"= 1'-0" DTLWDW03.DWG 10/21/98 14:54

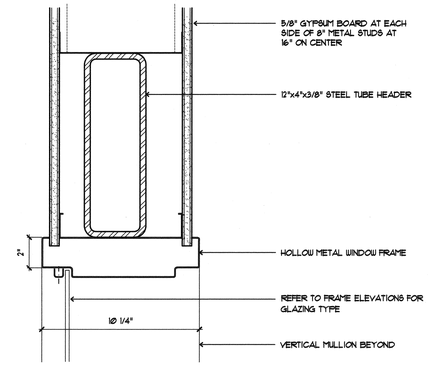

7 INTERIOR HOLLOW METAL WINDOW HEADER @ 8" STUD WALL

3"= 1'-0" DTLWDW01.DWG 07/21/98 15:18

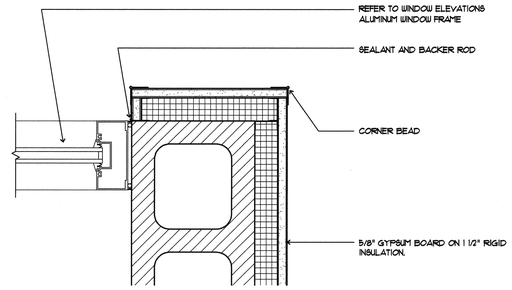

8 EXTERIOR WINDOW JAMB @ CMU WALL

3"= 1'-0" DTLWNW03.DWG 11/02/98 21:01

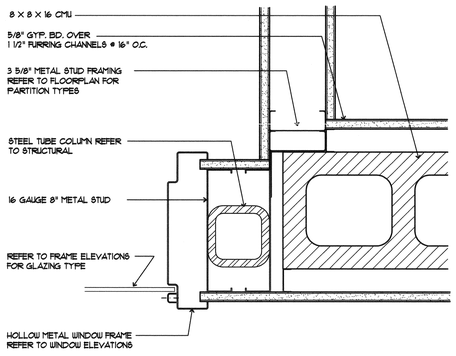

9 INTERIOR HOLLOW METAL WINDOW JAMB @ STEEL COLUMN

3"= 1'-0" DTLWDW01.DWG 07/21/98 15:18

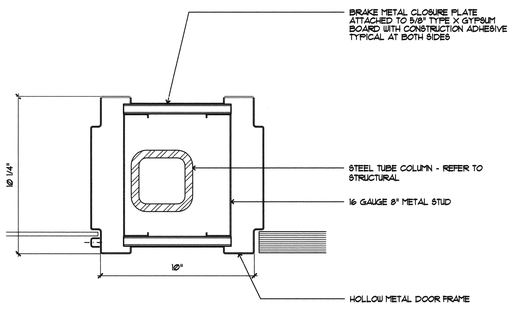

10 INTERIOR HOLLOW METAL WINDOW JAMB @ STEEL COLUMN

3"= 1'-0" DTLWDW01.DWG 07/21/98 15:18

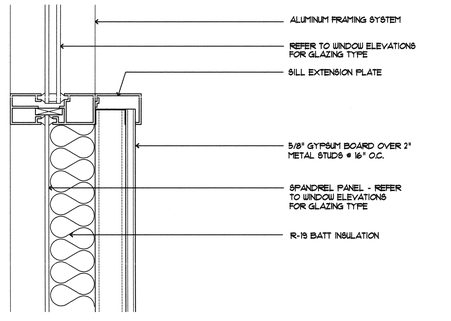

11 EXTERIOR ALUMINUM WINDOW SILL DETAIL

3"= 1'-0" DTLWDW01.DWG 07/21/98 15:18

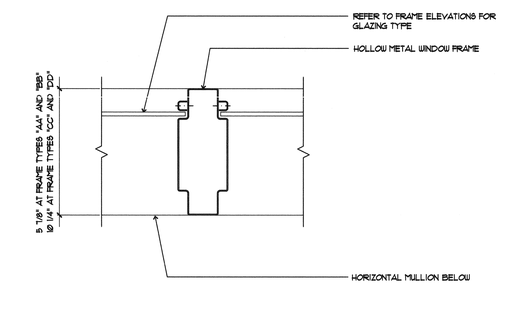

12 INTERMEDIATE VERTICAL MULLION AT HOLLOW METAL FRAME

3"= 1'-0" DTLWDW01.DWG 07/21/98 15:18

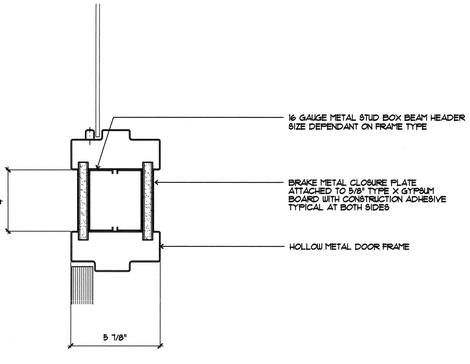

13 HORIZONTAL MULLION AT HOLLOW METAL FRAME TRANSITION

3"= 1'-0" DTLWNW03.DWG 10/19/99 15:55

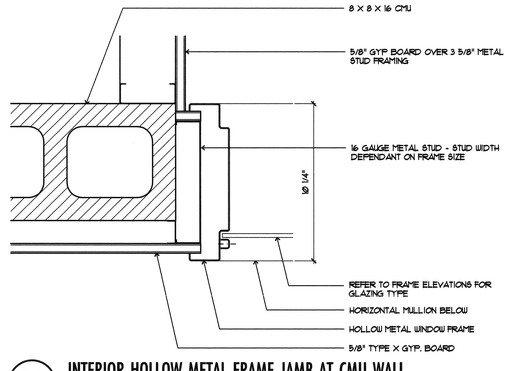

14 INTERIOR HOLLOW METAL FRAME JAMB AT CMU WALL

3"= 1'-0" DTLWDW01.DWG 07/21/98 15:18

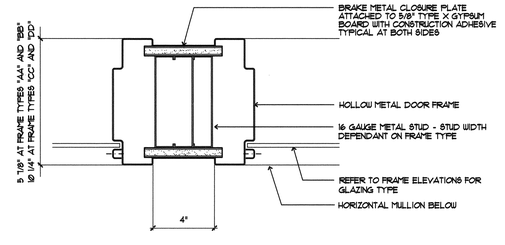

15 INTERIOR HOLLOW METAL FRAME JAMB AT TRANSOM

3"= 1'-0" DTLWDW01.DWG 07/21/98 15:18

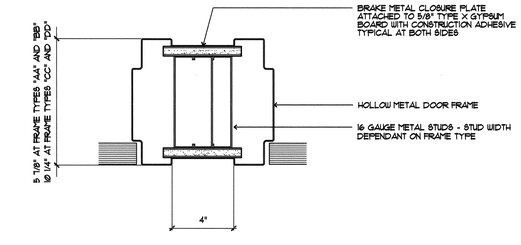

16 INTERIOR HOLLOW METAL FRAME JAMB AT DOORS

3"= 1'-0" DTLWDW01.DWG 07/21/98 15:18

JMA ARCHITECTURE STUDIOS
4292 SOUTH MARYLAND PARKWAY 2003

The Stan Fulton Building for the International Gaming Institute

Los Vegas, Nevada

the contractor shall check and verify all dimensions and report all errors and omissions to this office prior to commencing work. these drawings are not to be scaled

copyright 1996 JMA Architecture Studios

number	date	description

RECORD DRAWING

This record drawing, dated July 16, 2001, has been prepared, in part, based upon information furnished by others. While this information is believed to be reliable, JMA Architecture Studios, cannot assure its accuracy, and thus is not responsible for the accuracy of this record drawing or for any errors or omissions which may have been incorporated into it as a result. Those relying on this record document are advised to obtain independant verification of its accuracy before applying it for any purpose.

97105
project number

November 4, 1998
date

D. Bringas
drawn

Steve Wise
checked

Window Details

A8.14

J:\1997\97105\CADD\CD\105a814.dwg Thu Jul 12 10:33:02 2001 JMA Architecture Studios

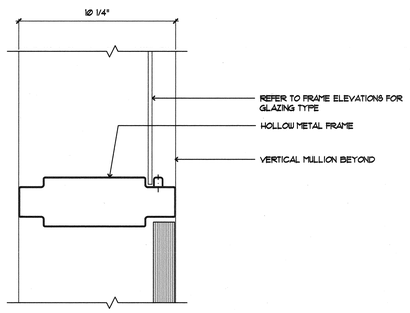

1 HORIZONTAL MULLION AT HOLLOW METAL FRAME TRANSITION

3"= 1'-0"

DTLWNW03.DWG 10/19/99 15:55

JMA ARCHITECTURE STUDIOS
4232 SOUTH MARYLAND PARKWAY
LAS VEGAS, NEVADA 89119

2003

The Stan Fulton Building for the International Gaming Institute

Las Vegas, Nevada

the contractor shall check and verify all dimensions and report all errors and omissions to this office prior to commencing work. these drawings are not to be scaled

copyright 1996 JMA Architecture Studios

number	date	description

RECORD DRAWING

This record drawing, dated July 16, 2001, has been prepared, in part, based upon information furnished by others. While this information is believed to be reliable, JMA Architecture Studios, cannot assure its accuracy, and thus is not responsible for the accuracy of this record drawing or for any errors or omissions which may have been incorporated into it as a result. Those relying on this record document are advised to obtain independent verification of its accuracy before applying it for any purpose.

97105
project number

November 4, 1998
date

D. Bringas
drawn

Steve Wise
checked

Door/Window Details

A8.15

J:\1997\97105\CADD\CD\105a815.dwg Thu Jul 12 10:33:18 2001 JMA Architecture Studios

TERRAZZO FLOORING LEGEND

DESIGNATION	DESCRIPTION
	TZF-1
	TZF-2
	TZF-3
	TZF-4

LEGFF01.DWG 08/04/98 19:53

A FLOOR FINISH PLAN

1/8"=1'-0"

105FLR01.DWG 03/18/98 15:09

JMA ARCHITECTURE STUDIOS
4232 SOUTH MARYLAND PARKWAY

The Stan Fulton Building for the International Gaming Institute

Las Vegas, Nevada

the contractor shall check and verify all dimensions and report all errors and omissions to this office prior to commencing work - these drawings are not to be scaled

copyright 1996 JMA Architecture Studios

number date description

RECORD DRAWING

This record drawing, dated July 10, 2001, has been prepared, in part, based upon information furnished by others. While this information is believed to be reliable, JMA Architecture Studios, cannot assure its accuracy, and thus is not responsible for the accuracy of this record drawing or for any errors or omissions which may have been incorporated into it as a result. Those relying on this record document are advised to obtain independent verification of its accuracy before applying it for any purpose.

97105
project number

November 4, 1998
date

D. Bringas
drawn

S. Wise
checked

First Level Floor Finish Plan

A9.01

J:\1997\97105\CAD\105a901.dwg Thu Jul 12 10:33:30 2001 JMA Architecture Studios

VCT FLOORING LEGEND

DESIGNATION	DESCRIPTION
	VCT-1
	VCT-2
	VCT-3
	VCT-4
	VCT-5

LEGFF02.DWG 08/04/98 19:59

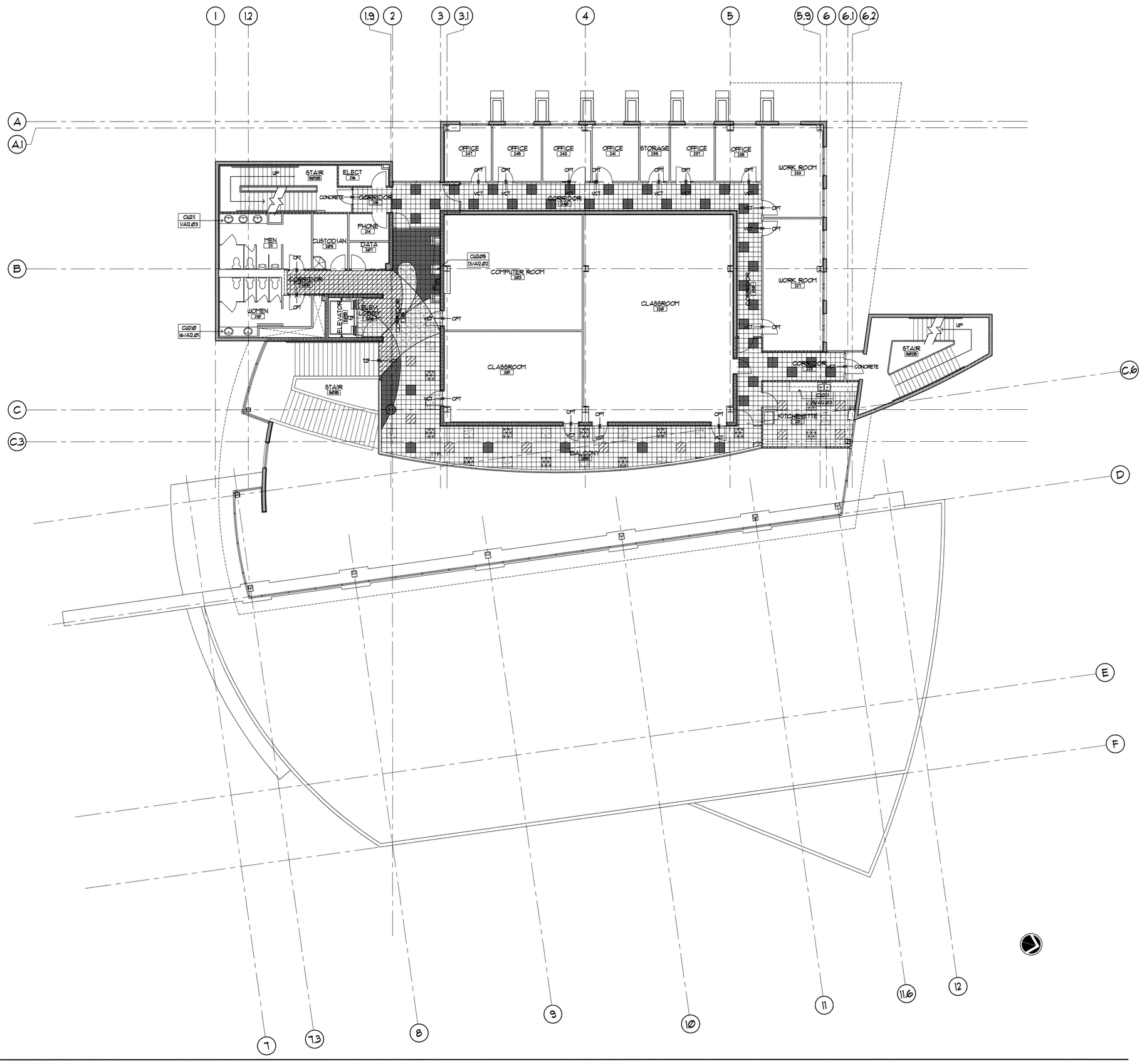

A SECOND LEVEL FLOOR PLAN

1/8"=1'-0"

105PLN02.DWG 08/28/98 15:09

J:\1997\97105\CADD\CD\105a902.dwg Thu Jul 12 10:33:48 2001 JMA Architecture Studios

JMA ARCHITECTURE STUDIOS

4192 SOUTH MARYLAND PARKWAY

2003

The Stan Fulton Building for the International Gaming Institute

Las Vegas, Nevada

the contractor shall check and verify all dimensions and report all errors and omissions to this office prior to commencing work - these drawings are not to be scaled

copyright 1996 JMA Architecture Studios

number	date	description

RECORD DRAWING

This record drawing, dated July 16, 2001, has been prepared, in part, based upon information furnished by others. While this information is believed to be reliable, JMA Architecture Studios, cannot assure its accuracy, and thus is not responsible for the accuracy of this record drawing or for any errors or omissions which may have been incorporated into it as a result. Those relying on this record document are advised to obtain independent verification of its accuracy before applying it for any purpose.

97105
project number

November 4, 1998
date

D. Bringas
drawn

S. Wise
checked

Second Level Floor Finish Plan

A9.02