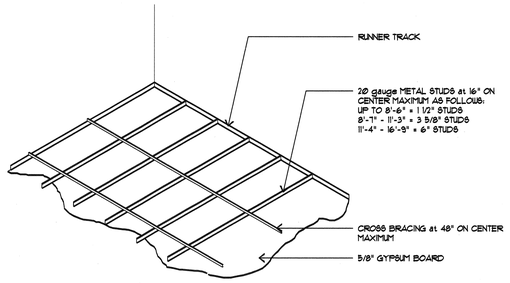

GYPSUM BOARD ON STUDS

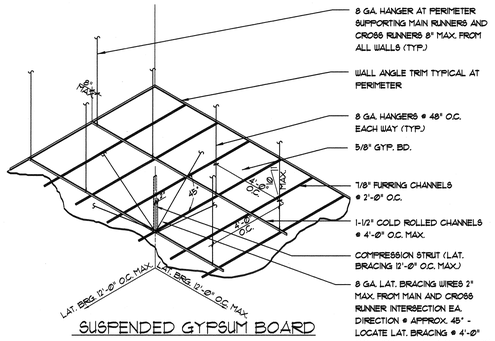

SUSPENDED GYPSUM BOARD

1 GYPSUM BOARD CEILING

NO SCALE

DTLCLG01.DWG 03/18/98 16:23

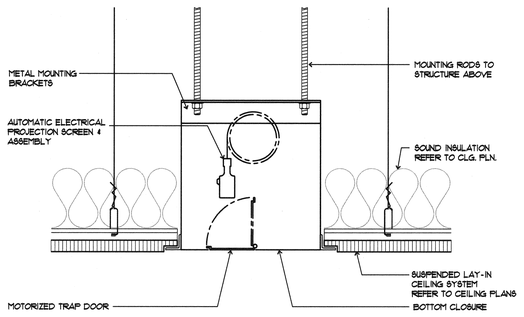

5 MOTORIZED PROJECTION SCREEN

3"= 1'-0"

DTLCLG16.DWG 06/12/98 07:52

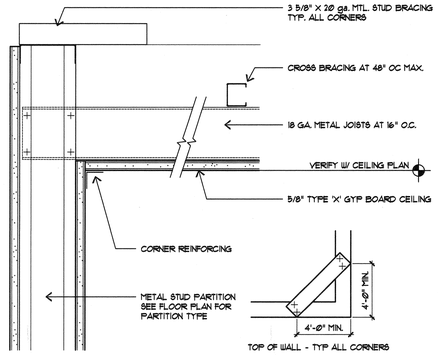

6 TYPICAL GYPSUM BOARD CEILING @ PARTITION

3"=1'-0"

DTLCLG06.DWG 03/18/98 15:53

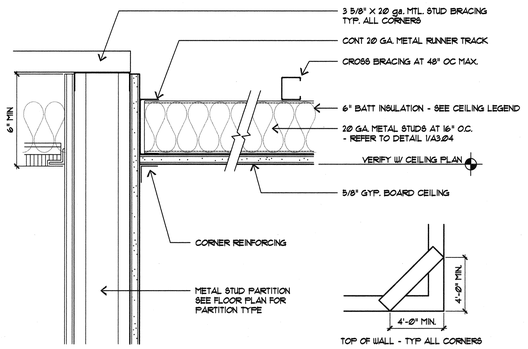

3 TYPICAL GYPSUM BOARD CEILING @ WALL

3"=1'-0"

DTLCLG03.DWG 03/18/98 15:49

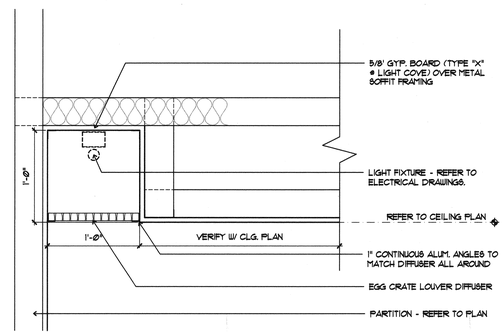

7 DROPPED SOFFIT @ RESTROOMS

1 1/2"=1'-0"

DTLCLG07.DWG 03/18/98 15:55

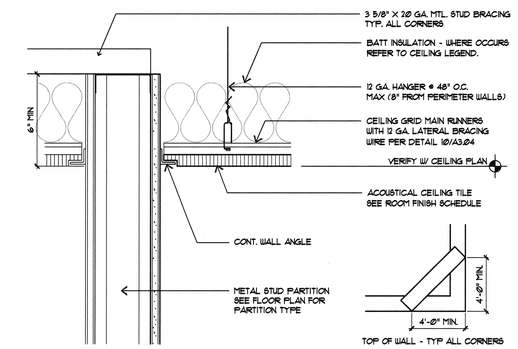

4 TYPICAL ACOUSTICAL CEILING @ WALL

3"=1'-0"

DTLCLG04.DWG 03/18/98 15:51

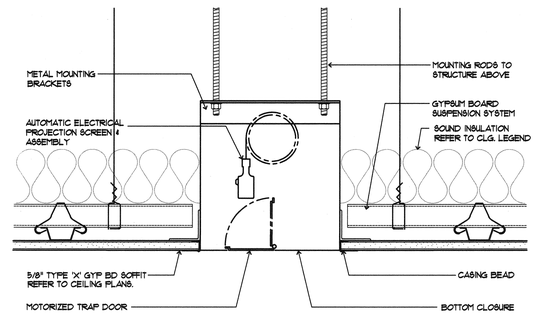

8 MOTORIZED PROJECTION SCREEN

3"=1'-0"

DTLCLG09.DWG 03/18/98 15:56

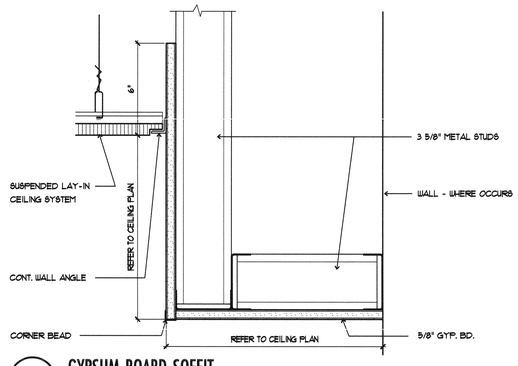

9 GYPSUM BOARD SOFFIT

3"=1'-0"

DTLCLG10.DWG 03/18/98 15:57

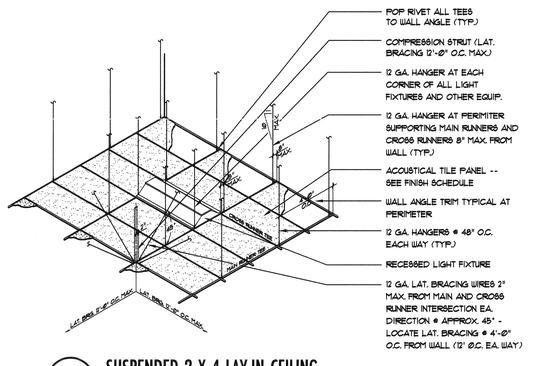

10 SUSPENDED 2 X 4 LAY-IN CEILING

NO SCALE

DTLCLG14.DWG 03/18/98 15:58

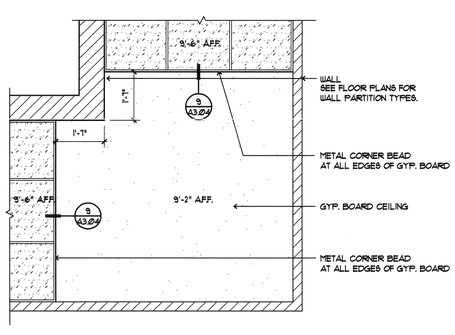

11 ENLARGED REFLECTED CEILING PLAN

1/2"= 1'-0"

DTLCLG11.DWG 07/16/98 11:42

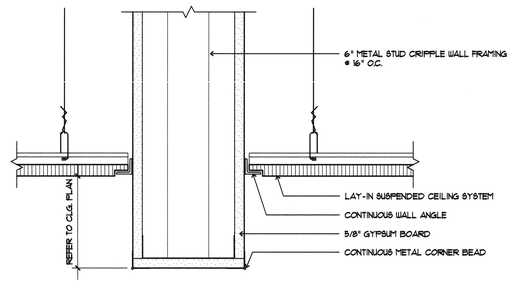

12 SUSPENDED CEILING AT GYPSUM BOARD SOFFIT

3"= 1'-0"

DTLCLG12.DWG 06/11/98 15:02

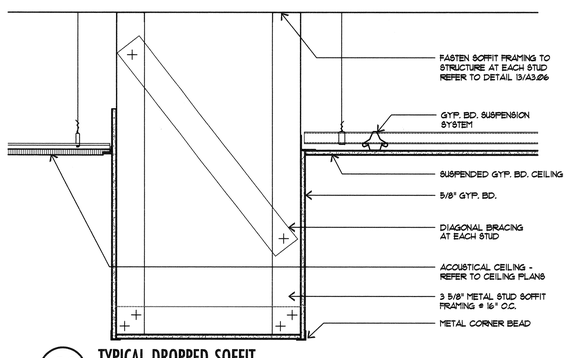

13 TYPICAL DROPPED SOFFIT

1 1/2"= 1'-0"

DTLCLG13.DWG 06/12/98 07:46

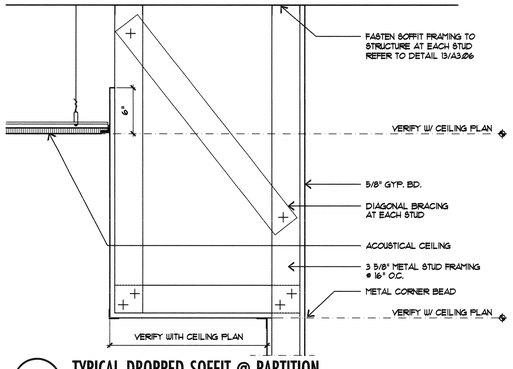

14 TYPICAL DROPPED SOFFIT @ PARTITION

1 1/2"= 1'-0"

DTLCLG15.DWG 06/12/98 07:49

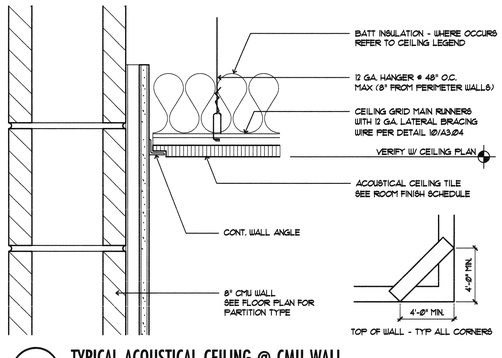

15 TYPICAL ACOUSTICAL CEILING @ CMU WALL

3"= 1'-0"

DTLCLG19.DWG 06/15/98 10:51

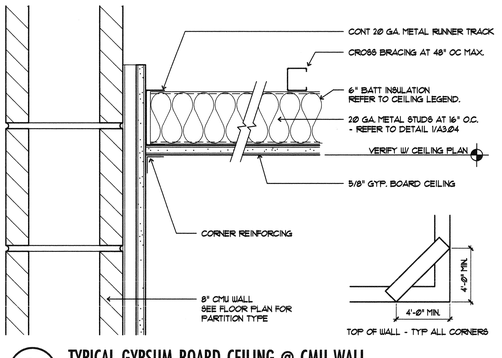

16 TYPICAL GYPSUM BOARD CEILING @ CMU WALL

3"= 1'-0"

DTLCLG20.DWG 06/15/98 10:51

JMA ARCHITECTURE STUDIOS
4232 SOUTH MARYLAND PARKWAY LAS VEGAS, NEVADA 89119 (702) 733-7733

The Stan Fulton Building for the International Gaming Institute

Las Vegas, Nevada

No contractor shall check and verify all dimensions and report all errors and omissions to this office prior to commencing work. Do not scale drawings as set is to be used

copyright 1996 JMA Architecture Studios

number	date	description

RECORD DRAWING

This record drawing, dated July 15, 2001, has been prepared, in part, based upon information furnished by others. While this information is believed to be reliable, JMA Architecture Studios, cannot assure its accuracy, and thus is not responsible for the accuracy of this record drawing or for any errors or omissions which may have been incorporated into it as a result. Those relying on this record document are advised to obtain independent verification of its accuracy before applying it for any purpose.

97105
project number

November 4, 1998
date

A. Batten
drawn

S. Wise
checked

Ceiling Details

A3.04

J:\1997\97105\CADD\CD\105a304.dwg Wed Jul 11 15:32:22 2001 JMA Architecture Studios

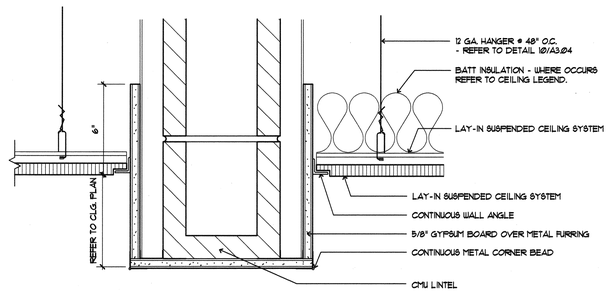

3 SUSPENDED CEILING AT CMU HEADER

3"= 1'-0"

DTLCLG21.DWG 06/15/98 14:22

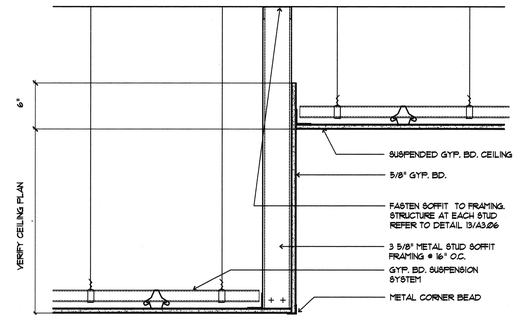

4 TYPICAL DROPPED SOFFIT

1 1/2"= 1'-0"

DTLCLG26.DWG 07/17/98 14:01

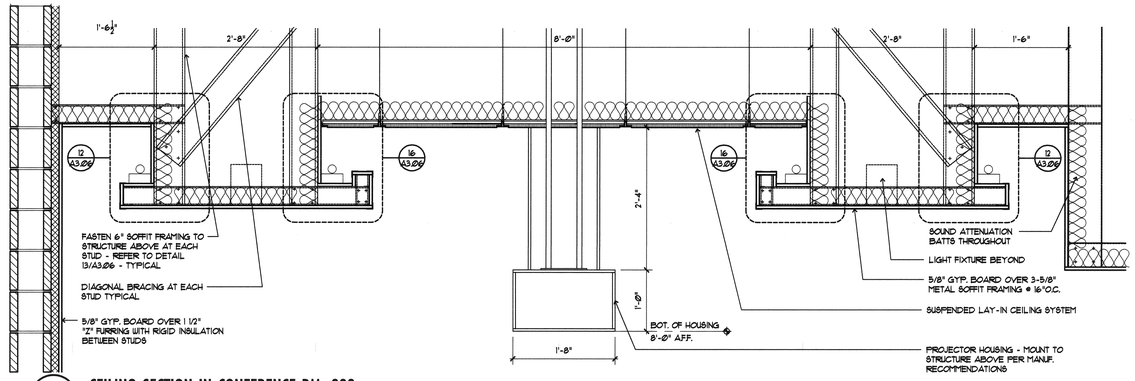

7 CEILING SECTION IN CONFERENCE RM. 333

1"=1'-0"

DTLCLG22.DWG 06/16/98 11:40

5

6

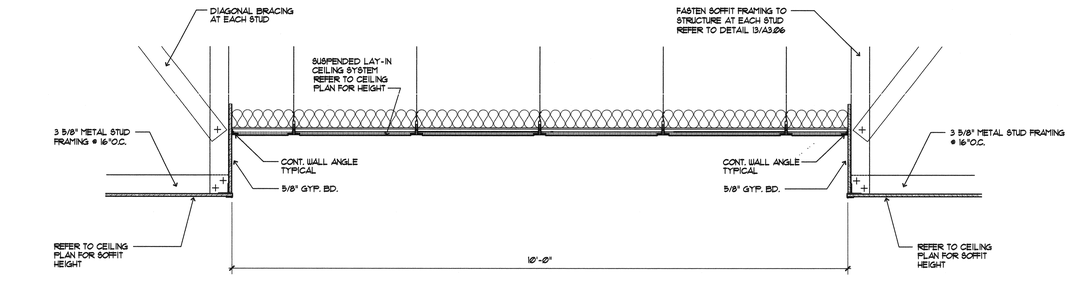

9 CEILING SECTION IN CONFERENCE RM. 321

1"= 1'-0"

DTLCLG23.DWG 06/16/98 14:48

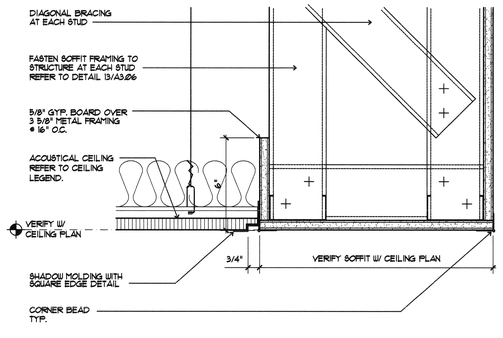

13 TYPICAL CEILING TILE / SOFFIT INTERFACE

3"=1'-0"

DTLCLG27.DWG 07/17/98 16:39

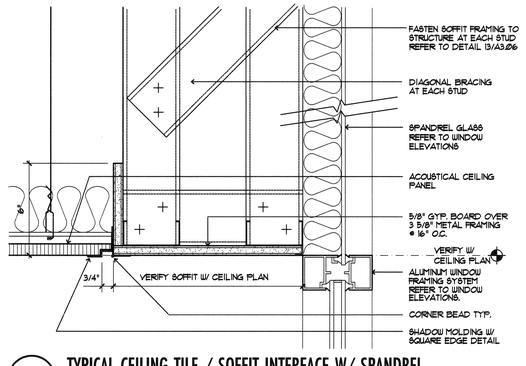

14 TYPICAL CEILING TILE / SOFFIT INTERFACE W/ SPANDREL

3"=1'-0"

DTLCLG28.DWG 11/03/98 01:32

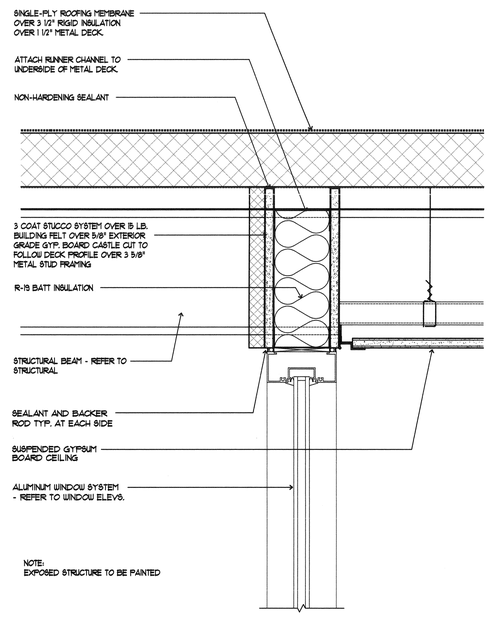

15 SOFFIT DETAIL

3"=1'-0"

DTLRF26.DWG 02/12/99 02:28

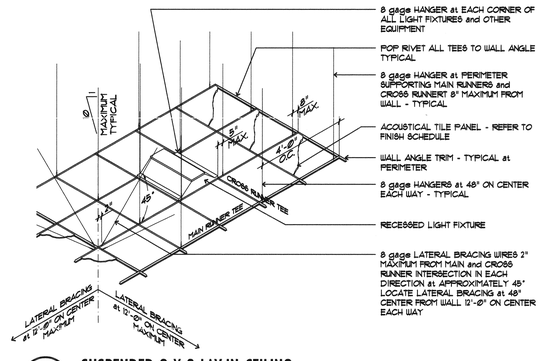

12 SUSPENDED 2 X 2 LAY-IN CEILING

NO SCALE

DTLCLG39.DWG 10/13/98 15:46

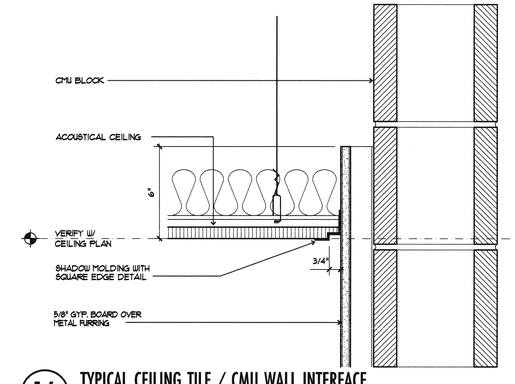

16 TYPICAL CEILING TILE / CMU WALL INTERFACE

3"=1'-0"

DTLCLG29.DWG 07/18/98 12:25

JMA ARCHITECTURE STUDIOS
4292 SOUTH MARYLAND PARKWAY LAS VEGAS, NEVADA 89119 (702) 784-4233

The Stan Fulton Building for the International Gaming Institute

Las Vegas, Nevada

the contractor shall check and verify all dimensions and report all errors and omissions to this office prior to commencing work - these drawings are not to be scaled

copyright 1996 JMA Architecture Studios

number date description

RECORD DRAWING

This record drawing, dated July 16, 2001, has been prepared, in part, based upon information furnished by others. While this information is believed to be reliable, JMA Architecture Studios, cannot assure its accuracy, and thus is not responsible for the accuracy of this record drawing or for any errors or omissions which may have been incorporated into it as a result. Those relying on this record document are advised to obtain independent verification of its accuracy before applying it for any purpose.

97105
project number

November 4, 1998
date

D. Bringas
drawn

S. Wise
checked

Ceiling Details

A3.05

J:\1997\97105\CADD\CD\105a305.dwg Wed Jul 11 15:32:49 2001 JMA Architecture Studios

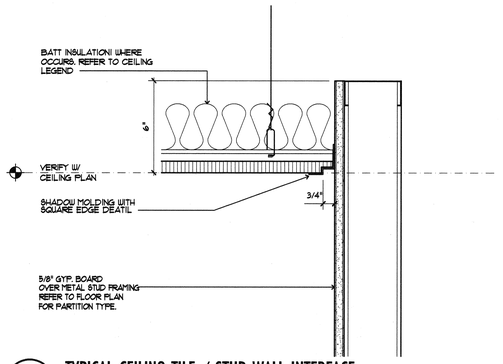

1 TYPICAL CEILING TILE / STUD WALL INTERFACE

3"=1'-0" DTLCLG30.DWG 07/18/98 17:10

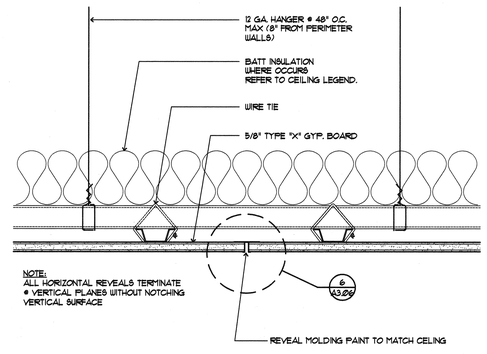

2 CONTROL JOINT AT CEILING

3"= 1'-0" DTLCLG31.DWG 07/19/98 13:14

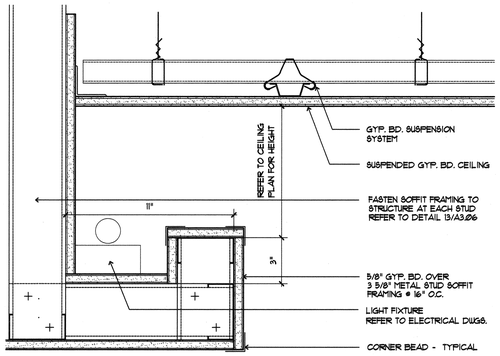

3 COVE LIGHTING DETAIL AT LOBBY

3"= 1'-0" DTLCLG32.DWG 10/22/99 15:36

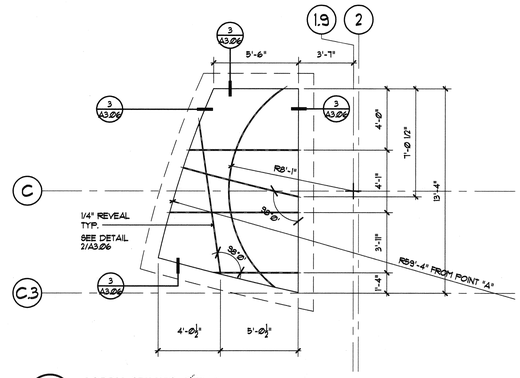

4 LOBBY CEILING DETAIL

1/4"= 1'-0" DTLCLG33.DWG 08/01/98 16:44

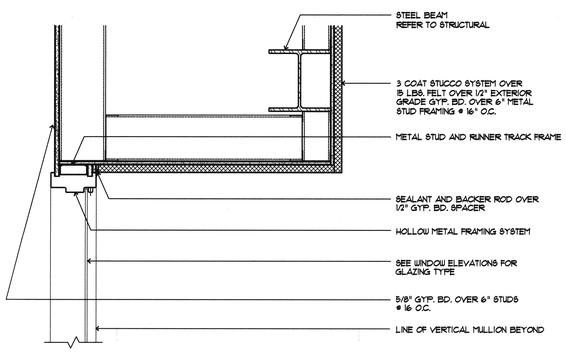

5 SOFFIT DETAIL

1 1/2"= 1'-0" DTLCLG34.DWG 08/03/98 18:39

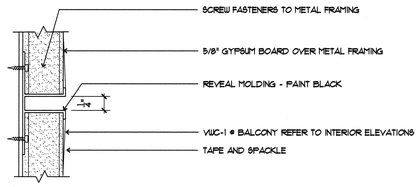

6 GYPSUM WALL / CEILING REVEAL DETAIL

1'-0"= 1'-0" DTLCLG35.DWG 08/04/98 16:06

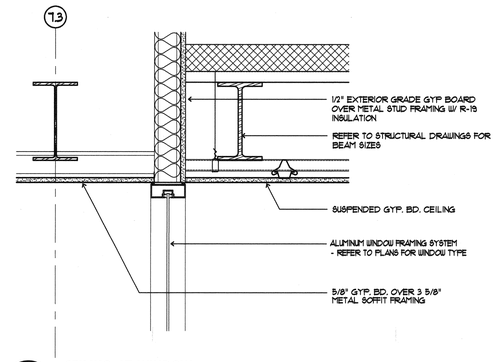

7 CEILING AT WINDOW

1 1/2"= 1'-0" DTLCLG36.DWG 08/11/98 15:05

8

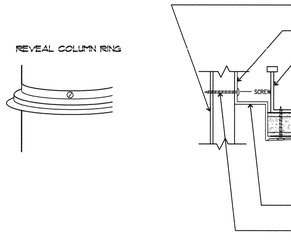

9 COLUMN REVEAL DETAIL

1'-0"= 1'-0" DTLCLG38.DWG 08/13/98 08:33

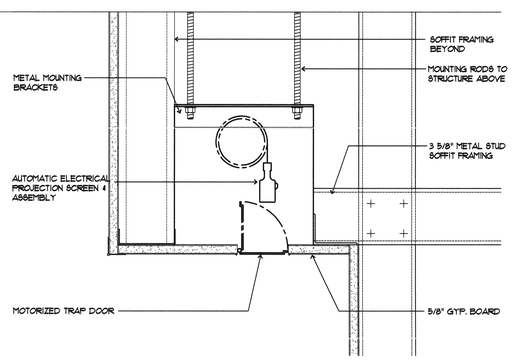

10 MOTORIZED PROJECTION SCREEN

3"=1'-0" DTLCLG05.DWG 03/18/98 15:52

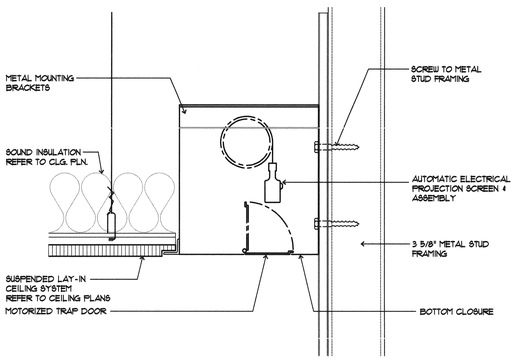

11 MOTORIZED PROJECTION SCREEN

3"=1'-0" DTLCLG40.DWG 10/20/98 15:55

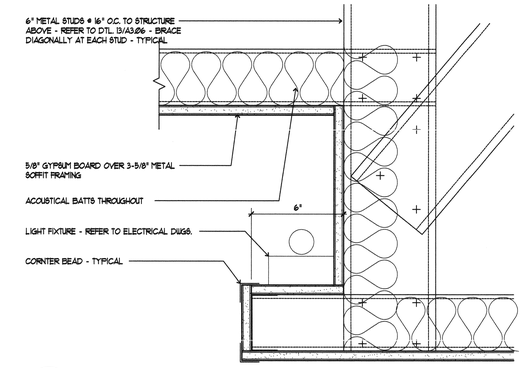

12 CEILING COVE DETAIL AT CONFERENCE RM. 333

3"=1'-0" DTLCLG43.DWG 10/22/99 14:19

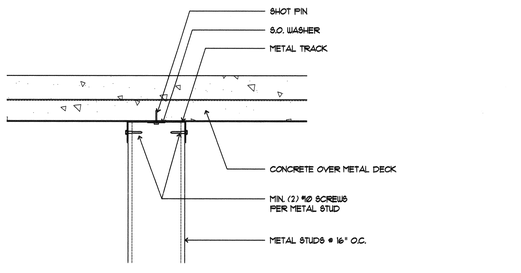

WALL PERPENDICULAR TO METAL DECK FLUTES

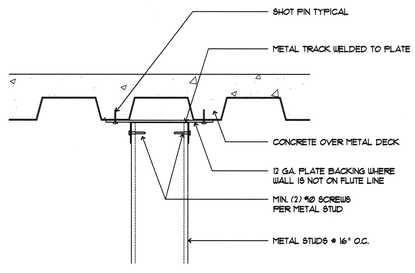

WALL PARALLEL TO METAL DECK FLUTES

13 DETAIL OF PARTITIONS @ METAL DECK

3"=1'-0" DTLCLG42.DWG 11/03/98 00:19

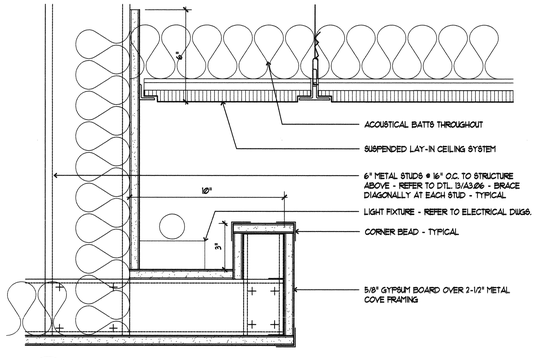

16 CEILING COVE DETAIL AT CONFERENCE RM. 333

3"=1'-0" DTLCLG44.DWG 10/22/99 15:06

J:\1997\97105\CAD\CD\105s306.dwg Wed Jul 11 15:33:17 2001 JMA Architecture Studios

JMA ARCHITECTURE STUDIOS
4292 SOUTH MARYLAND PARKWAY LAS VEGAS, NEVADA 89119 (702) 733-7733

The Stan Fulton Building for the International Gaming Institute

Las Vegas, Nevada

the contractor shall check and verify all dimensions and report all errors and omissions to this office prior to commencing work - these drawings are not to be scaled

copyright 1996 JMA Architecture Studios

number	date	description

RECORD DRAWING

This record drawing, dated July 16, 2001, has been prepared, in part, based upon information furnished by others. While this information is believed to be reliable, JMA Architecture Studios, cannot assure its accuracy, and thus is not responsible for the accuracy of this record drawing or for any errors or omissions which may have been incorporated into it as a result. Those relying on this record document are advised to obtain independent verification of its accuracy before applying it for any purpose.

97105
project number

November 4, 1998
date

D.BRINGAS
drawn

S. Wise
checked

Ceiling Details

A3.06

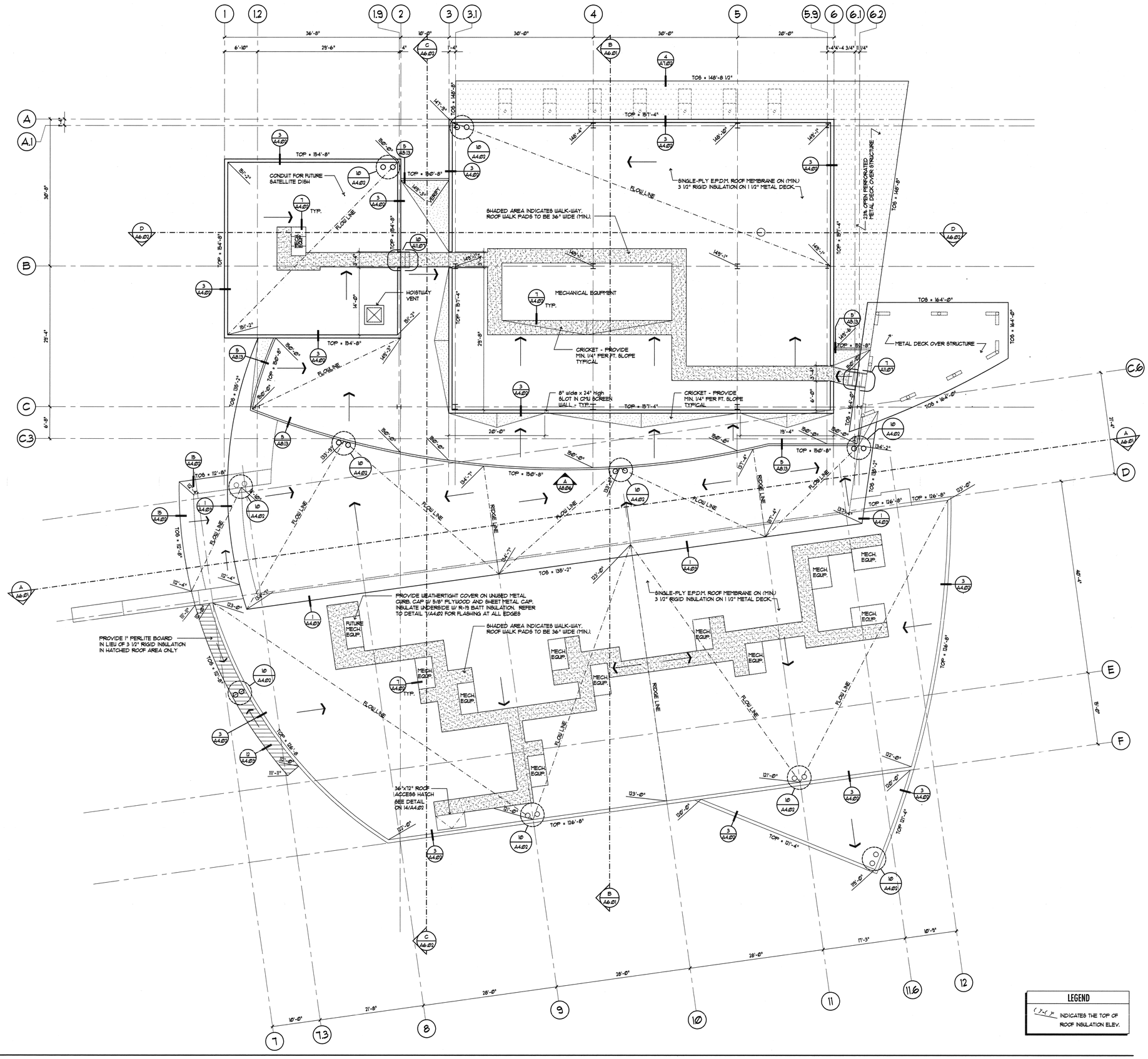

LEGEND

( )'-( )" INDICATES THE TOP OF ROOF INSULATION ELEV.

A ROOF PLAN
1/8"=1'-0"

105ROOF1.DWG 10/19/98 08:32

JMA ARCHITECTURE STUDIOS
4292 SOUTH MARYLAND PARKWAY
LAS VEGAS, NEVADA 89119 (702) 734-2033

The Stan Fulton Building for the International Gaming Institute

Las Vegas, Nevada

the contractor shall check and verify all dimensions and report all errors and omissions to this office prior to commencing work - these drawings are not to be scaled

copyright 1996 JMA Architecture Studios

number	date	description

RECORD DRAWING

This record drawing, dated July 16, 2001, has been prepared, in part, based upon information furnished by others. While this information is believed to be reliable, JMA Architecture Studios, cannot assure its accuracy, and thus is not responsible for the accuracy of this record drawing or for any errors or omissions which may have been incorporated into it as a result. Those relying on this record document are advised to obtain independent verification of its accuracy before applying it for any purpose.

97105
project number

November 4, 1998
date

M. Phillips
drawn

S. Wise
checked

Roof Plan

A4.01

J:\1997\97105\CADD\CD\105a401.dwg Wed Jul 11 15:33:45 2001 JMA Architecture Studios

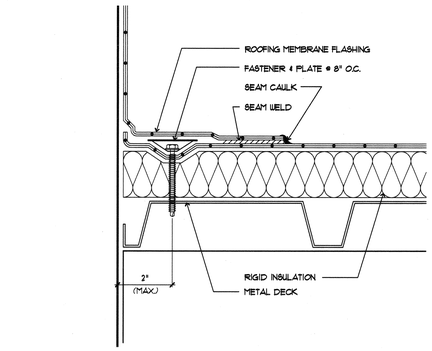

1 FLASHING/FASTENER @ VERTICAL WALL

6"=1'-0" DTLRF02.DWG 03/18/98 16:31

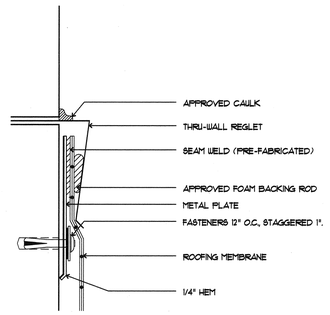

2 REGLET WITH MEMBRANE FLASHING

6"=1'-0" DTLRF03.DWG 03/18/98 16:32

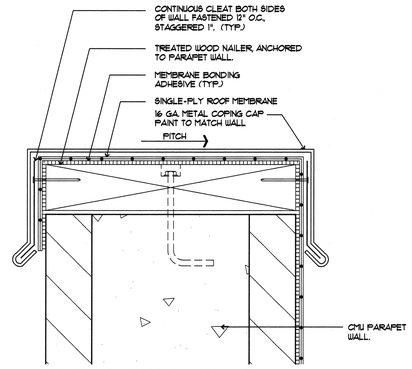

3 METAL COPING W/ MEMBRANE FLASHING

6"=1'-0" DTLRF05.DWG 07/10/98 10:01

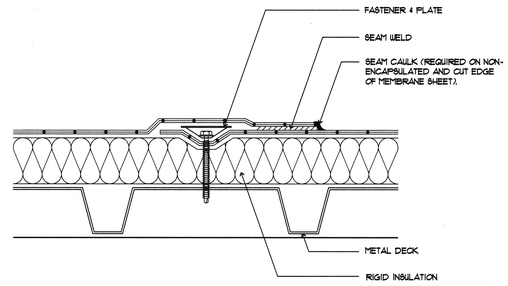

4 MEMBRANE ATTACHMENT

6"=1'-0" DTLRF08.DWG 03/18/98 16:39

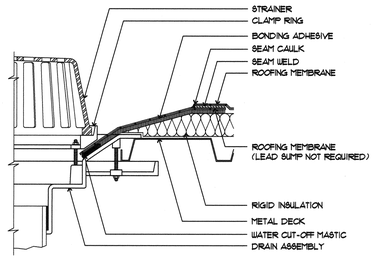

5 DRAIN FLASHING

3"=1'-0" DTLRF05.DWG 03/18/98 16:36

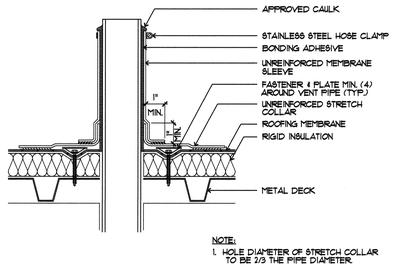

6 COLD VENT PIPE FLASHING

3"=1'-0" DTLRF06.DWG 03/18/98 16:37

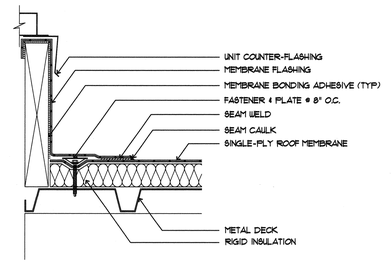

7 CURB FLASHING

3"=1'-0" DTLRF07.DWG 03/18/98 16:38

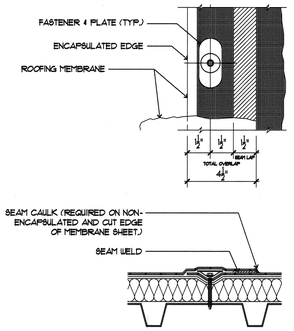

8 SEAM OVERLAP SECTIONAL

3"=1'-0" DTLRF09.DWG 03/18/98 16:40

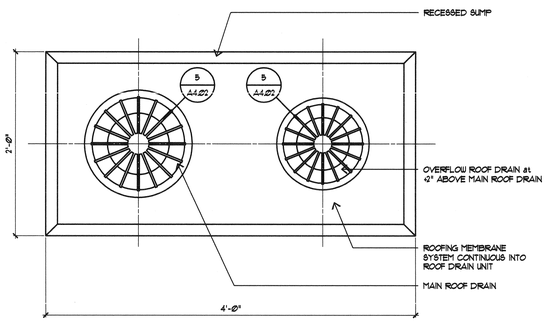

10 ROOF DRAIN

1 1/2"=1'-0" DTLRF10.DWG 03/18/98 16:41

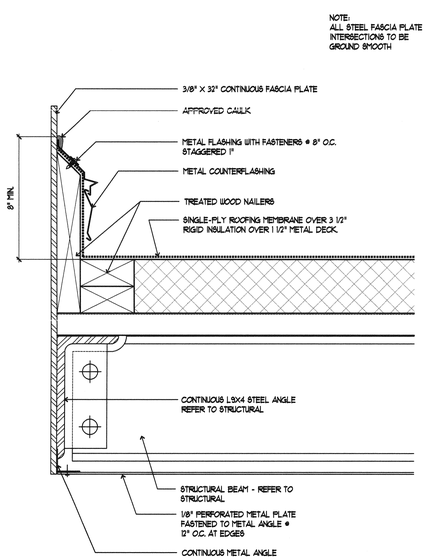

15 ROOF FASCIA

3"=1'-0" DTLRF16.DWG 10/31/98 12:03

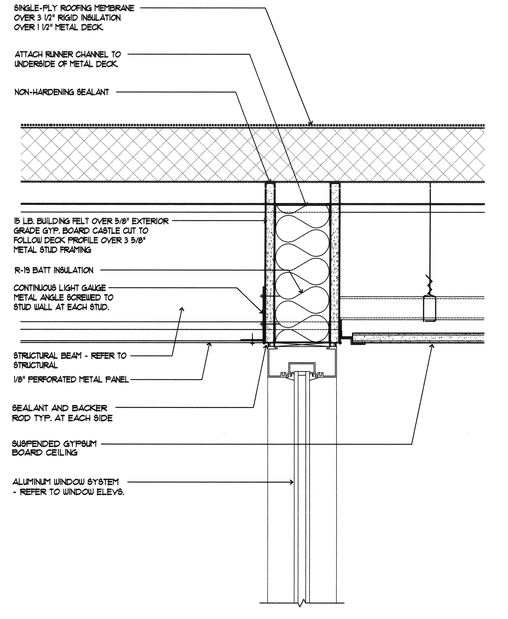

16 SOFFIT DETAIL

3"=1'-0" DTLRF24.DWG 10/31/98 11:59

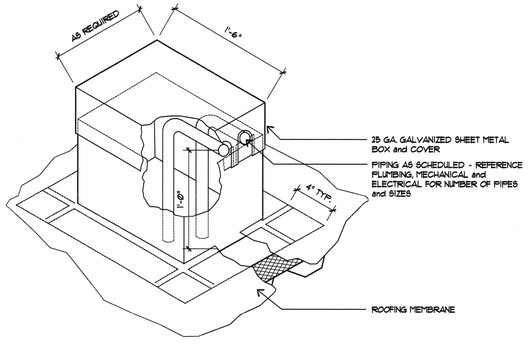

13 ROOF PENETRATION FLASHING

NO SCALE DTLRF11.DWG 03/18/98 15:44

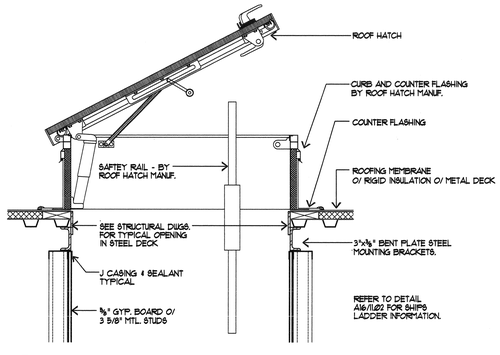

14 ROOF HATCH ASSEMBLY

1"=1'-0" DTLRF12.DWG 03/18/98 15:45

J:\1997\97105\CADD\CD\105s402.dwg Wed Jul 11 15:34:17 2001 JMA Architecture Studios

JMA ARCHITECTURE STUDIOS
4292 SOUTH MARYLAND PARKWAY LAS VEGAS, NEVADA 89119 (702) 733-7733 2033

The Stan Fulton Building for the International Gaming Institute

Las Vegas, Nevada

the contractor shall check and verify all dimensions and report all errors and omissions to this office prior to commencing work - these drawings are not to be scaled

copyright 1996 JMA Architecture Studios

number	date	description

RECORD DRAWING

This record drawing, dated July 16, 2001, has been prepared, in part, based upon information furnished by others. While this information is believed to be reliable, JMA Architecture Studios, cannot assure its accuracy, and thus is not responsible for the accuracy of this record drawing or for any errors or omissions which may have been incorporated into it as a result. Those relying on this record document are advised to obtain independent verification of its accuracy before applying it for any purpose.

97105
project number

November 4, 1998
date

A. Batten
drawn

S. Wise
checked

Roof Details

A4.02

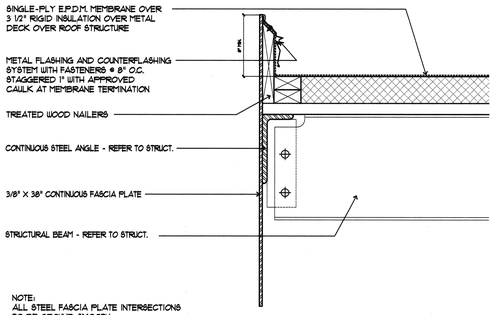

1 FASCIA DETAIL

1 1/2"= 1'-0"

DTLRF17.DWG 08/11/98 16:15

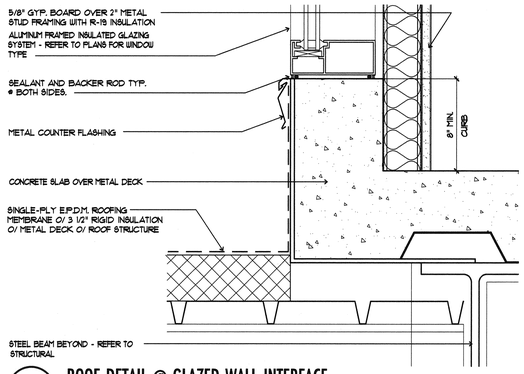

2 ROOF DETAIL @ GLAZED WALL INTERFACE

3"=1'-0"

DTLRF20.DWG 08/03/98 19:14

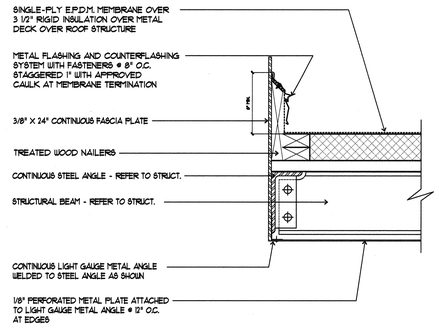

3 FASCIA DETAIL

1 1/2"= 1'-0"

DTLRF18.DWG 08/13/98 14:13

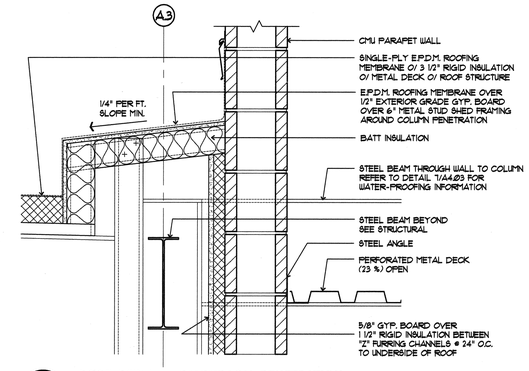

4 ROOF DETAL @ DIAPHRAGM PENETRATION

1 1/2"= 1'-0"

DTLRF21.DWG 08/03/98 19:18

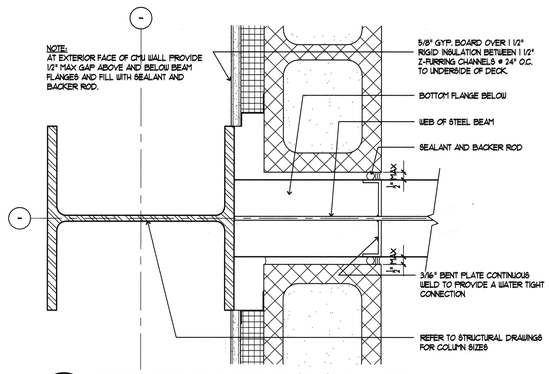

7 TYPICAL STEEL BEAM THRU CMU WALL PLAN DETAIL

3"= 1'-0"

DTLRF25.DWG 02/11/99 23:32

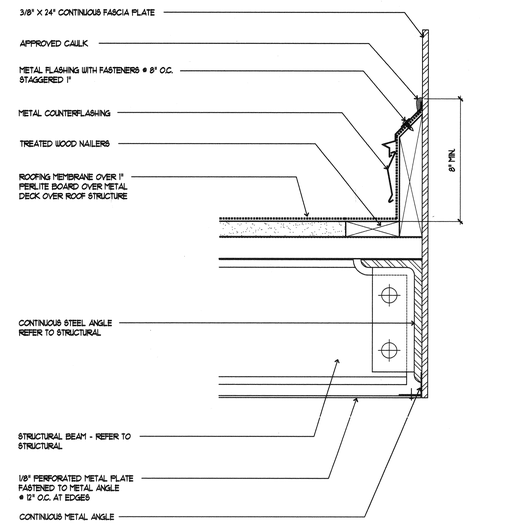

12 ROOF FASCIA DETAIL

3"= 1'-0"

DTLRF23.DWG 08/11/98 15:59

JMA ARCHITECTURE STUDIOS
4232 SOUTH MARYLAND PARKWAY LAS VEGAS, NEVADA 89119 (702) 733-2933

The Stan Fulton Building for the International Gaming Institute

Las Vegas, Nevada

the contractor shall check and verify all dimensions and report all errors and omissions to this office prior to commencing work - these drawings are not to be scaled

copyright 1996 JMA Architecture Studios

number | date | description

RECORD DRAWING

This record drawing, dated July 16, 2001, has been prepared, in part, based upon information furnished by others. While this information is believed to be reliable, JMA Architecture Studios, cannot assure its accuracy, and thus is not responsible for the accuracy of this record drawing or for any errors or omissions which may have been incorporated into it as a result. Those relying on this record document are advised to obtain independent verification of its accuracy before applying it for any purpose.

97105
project number

November 4, 1998
date

D. Bringas
drawn

S. Wise
checked

Roof Details

A4.03

J:\1997\97105\CAD\CD\105s403.dwg Wed Jul 11 15:34:35 2001 JMA Architecture Studios

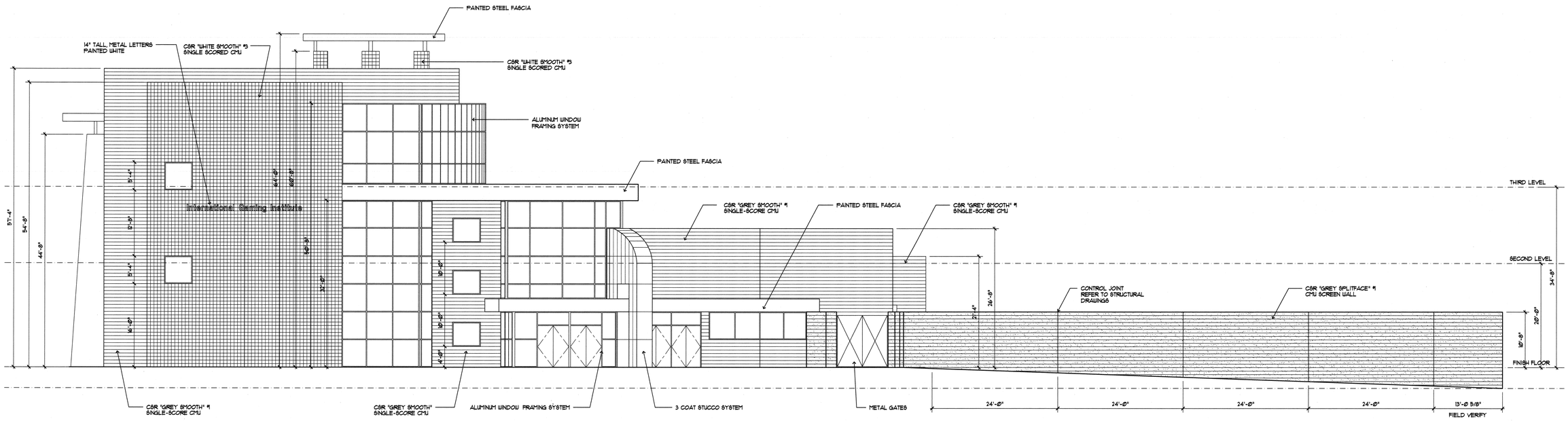

A NORTHWEST EXTERIOR ELEVATION

1/8"=1'-0"

105ELV1.DWG 12/12/97 11:48

B SOUTHWEST EXTERIOR ELEVATION

1/8"=1'-0"

105ELV2.DWG 02/19/98 09:07

J:\1997\97105\CADD\CD\105d501.dwg Wed Jul 11 15:34:52 2001 JMA Architecture Studios

JMA ARCHITECTURE STUDIOS
4292 SOUTH MARYLAND PARKWAY LAS VEGAS, NEVADA 89119 (702) 733-2033

The Stan Fulton Building for the International Gaming Institute

Las Vegas, Nevada

the contractor shall check and verify all dimensions and report all errors and omissions to this office prior to commencing work. these drawings are not to be scaled

copyright 1996 JMA Architecture Studios

number date description

RECORD DRAWING

This record drawing, dated July 16, 2001, has been prepared, in part, based upon information furnished by others. While this information is believed to be reliable, JMA Architecture Studios, cannot assure its accuracy, and thus is not responsible for the accuracy of this record drawing or for any errors or omissions which may have been incorporated into it as a result. Those relying on this record document are advised to obtain independent verification of its accuracy before applying it for any purpose.

97105
project number

November 4, 1998
date

M. Phillips
drawn

S. Wise
checked

Exterior Elevations

A5.01

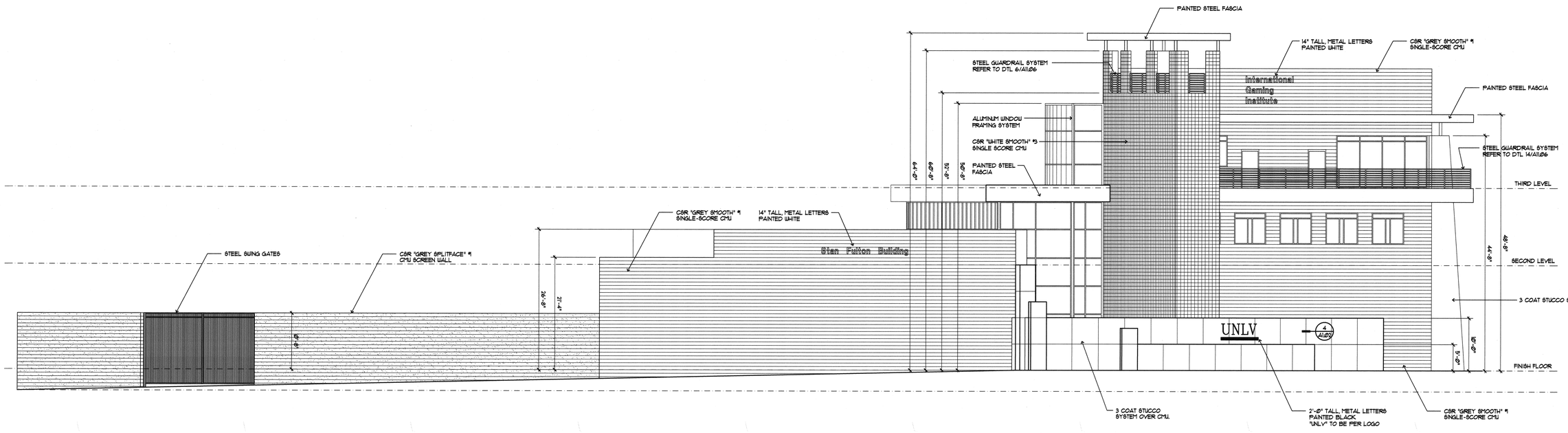

C SOUTHEAST EXTERIOR ELEVATION

1/8"=1'-0"

105ELV3.DWG 07/14/98 11:26

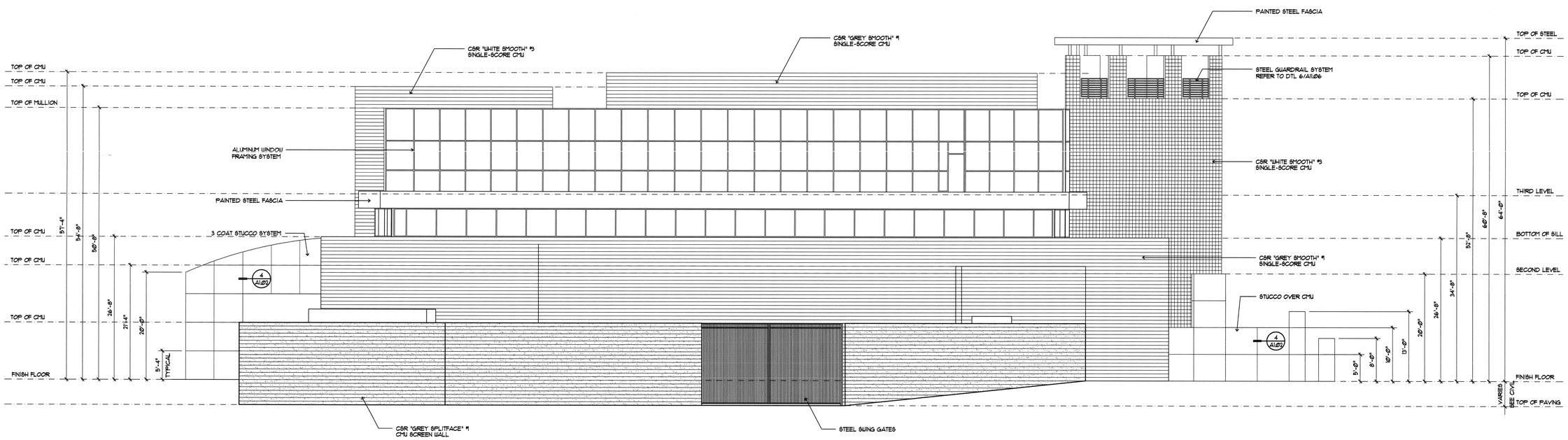

D NORTHEAST EXTERIOR ELEVATION

1/8"=1'-0"

105ELV4.DWG 06/18/98 14:49

J:\1997\97105\CADD\CD\105s502.dwg Wed Jul 11 15:35:15 2001 JMA Architecture Studios

JMA ARCHITECTURE STUDIOS

4292 SOUTH MARYLAND PARKWAY LAS VEGAS, NEVADA 89119 (702) 733-7733

The Stan Fulton Building for the International Gaming Institute

Las Vegas, Nevada

the contractor shall check and verify all dimensions and report all errors and omissions to this office prior to commencing work. these drawings are not to be scaled

copyright 1996 JMA Architecture Studios

number	date	description

RECORD DRAWING

This record drawing, dated July 16, 2001, has been prepared, in part, based upon information furnished by others. While this information is believed to be reliable, JMA Architecture Studios, cannot assure its accuracy, and thus is not responsible for the accuracy of this record drawing or for any errors or omissions which may have been incorporated into it as a result. Those relying on this record document are advised to obtain independent verification of its accuracy before applying it for any purpose.

97105
project number

November 4, 1998
date

M. Phillips
drawn

S. Wise
checked

Exterior Elevations

A5.02